#5 AN/GSG 10(N)

ARMY TM 11-5815-602-24
NAVY EE161-DM-MMM-010/E154UGC74
AIR FORCE TO 31W4-2UGC74-2

ORGANIZATIONAL, DIRECT SUPPORT, AND GENERAL SUPPORT MAINTENANCE MANUAL

REF. ONLY

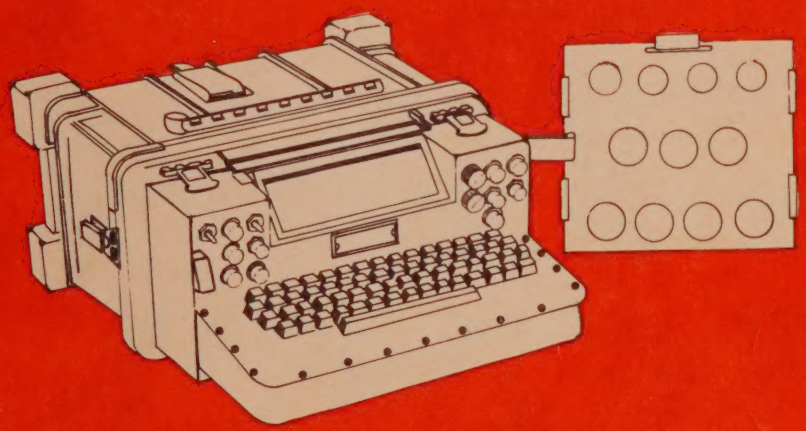

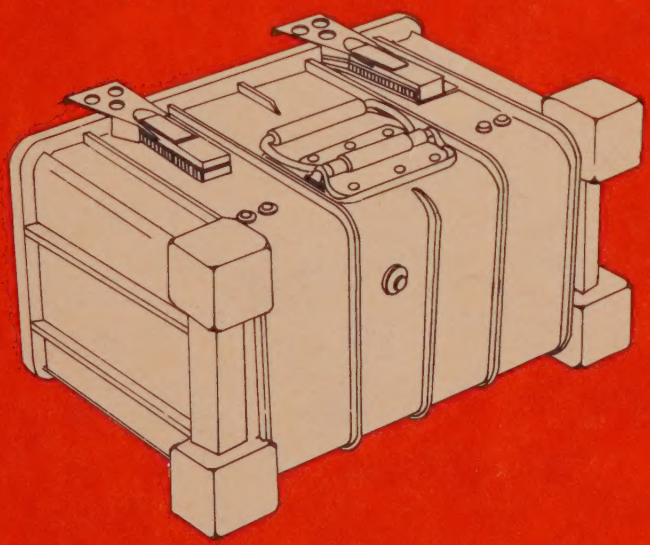

EQUIPMENT DESCRIPTION AND DATA Page 1-4

SERVICE UPON RECEIPT AND INSTALLATION Page 2-0

FUNCTIONAL DESCRIPTION Page 3-3

ORGANIZATIONAL MAINTENANCE INSTRUCTIONS Page 4-0

DIRECT SUPPORT MAINTENANCE INSTRUCTIONS Page 5-1

REMOVAL AND REPLACEMENT OF MODULAR ASSEMBLIES Page 5-12

DIRECT SUPPORT MAINTENANCE ADJUSTMENTS Page 5-81

GENERAL SUPPORT MAINTENANCE INSTRUCTIONS Page 6-1

GENERAL SUPPORT TESTING PROCEDURES Page 6-54

TERMINAL, COMMUNICATIONS AN/UGC-74A(V)3
(NSN 5815-01-062-8194)

DEPARTMENTS OF THE ARMY, THE NAVY, AND THE AIR FORCE

8 JANUARY 1984

5 SAFETY STEPS TO FOLLOW IF SOMEONE IS THE VICTIM OF ELECTRICAL SHOCK

1. DO NOT TRY TO PULL OR GRAB THE INDIVIDUAL
2. IF POSSIBLE , TURN OFF THE ELECTRICAL POWER
3. IF YOU CANNOT TURN OFF THE ELECTRICAL POWER, PULL, PUSH, OR LIFT THE PERSON TO SAFETY USING A WOODEN POLE OR A ROPE OR SOME OTHER INSULATING MATERIAL
4. SEND FOR HELP AS SOON AS POSSIBLE
5. AFTER THE INJURED PERSON IS FREE OF CONTACT WITH THE SOURCE OF ELECTRICAL SHOCK, MOVE THE PERSON A SHORT DISTANCE AWAY AND IMMEDIATELY START ARTIFICIAL RESUSCITATION

TABLE OF CONTENTS - Continued

Chapter Page

24-6. Basic CPU Operations 24-15
a. Instruction Fetch 24-15
b. Instruction Interpretation 24-15
c. Operand Fetch 24-15
d. Instruction Execution 24-16
e. Terminate Analysis 24-16
24-7. Detailed Functional Description of Memory Interface Controller 24-16
a. Memory Address Register 24-16
b. Page Selector Logic 24-18
c. Page Control and Address Registers 24-18
d. Special Address Detector 24-18
e. Micro-Operation Code Register 24-18
f. Memory Mode Control 24-18
(1) Read-restore mode 24-21
(2) Read-modify mode 24-21
(3) Clear-write mode 24-21
(4) Memory bank assignment or test 24-21
g. Access Verifier 24-21
h. Memory Data Register 24-21
i. Parity Generator and Checker Logic 24-21
j. Byte Transfer Interchange 24-22
(1) Byte transfers 24-22
(2) Half word transfers 24-22
(3) Full word transfers 24-22
k. Memory Interface Bus 24-22
24-8. Detailed Functional Description of CPU Data Bus 24-22
a. Internal Data Paths 24-22
b. External Data Paths 24-22
(1) MCMU data path 24-23
(2) IOU data path 24-23
(3) CTS data path 24-23
24-9. Detailed Functional Description of Instruction Controller 24-23
a. Command Register 24-23
(1) E field, bit position 0 24-23
(2) F field, bit positions 1 thru 6 24-23
(3) M field, bit positions 7 and 8 24-23
(4) H field, bit positions 9 thru 12 24-23
(5) S field, bit positions 13 thru 15 24-23
b. Instruction Command Decoder 24-23
c. Instruction Location Register 24-25
d. Indicator Register 24-25
(1) OT, overflow trap override, bit position 0 24-25
(2) LC, level change, bit position 1 24-25
(3) MT, memory test, bit position 6 24-25
(4) PV, privilege violation, but position 7 24-25
(5) IE, input parity error, bit position 8 24-25
(6) ME, memory parity error, bit position 9 24-26

TABLE OF CONTENTS - Continued

Chapter

Page

(7) DT, device timeout, bit position 10 24-26
(8) NF, nonimplemented instruction flag, bit position 11 24-26
(9) CF, carry flag, bit position 12 24-26
(10) OF, overflow/greater flag, bit position 13 24-26
(11) EF, equal/excess flag, bit position 14 24-26
(12) LF, less flag, bit position 15 24-26
e. Timing Generator and Oscillator 24-26
f. State Counter 24-26
(1) B bit, bootstrap load 24-27
(2) E bit, execution 24-27
(3) F bit, fetch 24-27
(4) L bit, level change 24-27
(5) Major counter field, bit positions 0 thru 7 24-27
(6) Minor counter field, bit positions 10 thru 12 24-27
g. State Counter Decoder 24-27
h. Micro-Operation Encoder 24-27
i. Micro-Operation Code Register 24-28
j. Micro-Operation Qualifier Selectors 24-28
k. Iteration Counter 24-28
l. Control Register 24-28
(1) UN bit, run condition 24-28
(2) US bit, start condition 24-28
(3) Terminate condition, bit positions 0 thru 5 24-30
(a) Power off, bit 0 24-30
(b) Error exit, bit 1 24-30
(c) Trap instruction, bit 2 24-30
(d) Level lock, bit 3 24-30
(e) Auction initiate, bit 4 24-30
(f) Level change by instruction, bit 5 24-30
(4) I/O buffer bits, bits 11 and 14 24-30
24-10. Detailed Functional Description of Process Registers 24-30
a. Process Register Uses 24-30
(1) Indicator register and instruction location register 24-30
(2) Accumulators 24-30
(3) Index registers 24-32
(4) Mask register 24-32
(5) Trap register 24-32
b. Process Register Addressing 24-32
c. Micro-Operation Code Register 24-32
d. Address Decoder 24-32
e. Input and Output Gates 24-32
24-11. Detailed Functional Description of the Arithmetic Section 24-32
a. Accumulator Register 24-32
b. Accumulator Extension Register 24-34
c. Operand Register 24-34

TABLE OF CONTENTS - Continued

Chapter | Page

d. Carry Accelerated Adder and Logic Function Generator 24-34
(1) Adder 24-34
(2) Carry accelerator 24-34
(3) Logic function generator 24-34
e. Range and Value Detector 24-34
f. Bit Mask 24-34
g. Micro-Operation Code Register 24-34
h. Add/Subtract Control 24-34
i. Multiply/Divide Control 24-34
24-12. Detailed Functional Description of Special Registers Stored in Base Memory 24-35
a. Query Register 24-35
(1) IPE, instruction parity error, bit position 0 24-35
(2) LPE, level change parity error, bit position 1 24-35
(3) IV, instruction violation, bit position 2 24-35
(4) MV, memory access violation, bit position 3 24-35
(5) MTO, memory time-out, bit position 4 24-35
(6) SV, specification violation, bit position 5 24-35
(7) D, page designator, bit positions 6 thru 9 24-35
(8) PPL, prior program level, bit positions 10 thru 15 24-35
(9) LLI, level lock indicator, bit position 16 24-35
(10) TPL, tentative program level, bit positions 18 thru 23 24-37
(11) APL, active program level, bit positions 24 thru 31 24-37
b. Executive Link Register 24-37
c. Program Activity Register 24-37
d. Process Registers 24-37
(1) Process register uses 24-37
(a) Indicator register (1/2) 24-37
(b) Instruction location register (1/2) 24-40
(c) Index registers (7) 24-40
(d) Accumulators (6) 24-40
(e) Mask register (1) 24-40
(f) Trap register (1) 24-40
(2) Process register addressing 24-40
e. Page Control and Address Registers 24-40
(1) PC, page control field, bit positions 0 and 1 24-41
(2) PA, page address field, bit positions 2 thru 15 24-41
f. Privilege and Level Link Register 24-41
(1) P, privilege status, bit positions 0 and 1 24-41
(2) LPL, link program level, bit positions 2 thru 7 24-41
(3) C, level control, bit positions 8 and 9 24-41
(4) CPL, call program level, bit positions 10 thru 15 . . . 24-41
(5) A, link argument, bit positions 16 thru 31 24-46
(6) Level link example 24-46
g. Queue Register 24-46

TABLE OF CONTENTS - Continued

Chapter — Page

24-13. Detailed Functional Description of Program Level Controller 24-46
a. Program Level Controller Functions 24-46
(1) Query register 24-46
(a) IPE, instruction parity error, bit position 0 24-46
(b) LPE, level change parity error, bit position 1 24-49
(c) IV, instruction violation, bit position 2 24-49
(d) MV, memory access violation, bit position 3 . . . 24-49
(e) MTO, memory time-out, bit position 4 24-49
(f) SV, specification violation, bit position 5 24-49
(g) D, page designator, bit positions 6 thru 9 24-49
(h) PPL, prior program level, bit positions 10 thru 15 24-49
(i) LLI, level lock indicator, bit position 16 24-49
(2) Tentative program level register 24-49
(a) P, privilege status, bit positions 0 and 11 24-49
(b) TPL, tentative program level, bit positions 2 thru 7 24-49
(c) PRC, process register control, bit position 8 . . . 24-49
(d) PAC, page address control, bit position 9 24-49
(3) Program level register 24-49
(4) Sixteen bit auction logic 24-50
(5) Comparison of priority 24-50
(6) Micro-operation code register 24-50
b. Program Level Change Sequences 24-50
(1) Reset status bit 24-50
(2) Set status bit 24-50
(3) Auction program activity register 24-50
(4) Store process register 24-51
(5) Fetch privilege and control 24-51
(6) Loading page control and address registers and process registers 24-51
(7) Store query register 24-51
24-14. Detailed Functional Description of Diagnose Section 24-51
a. Functions of the Diagnose Section 24-51
(1) Auto-test 24-51
(2) Diagnose option 1 (DIG 1) 24-53
(3) Diagnose option 2 (DIG 2) 24-53
(4) Diagnose option 3 (DIG 3) 24-53
b. Diagnose Section Block Diagram Description 24-53
(1) Status logic 24-53
(2) Micro-operation encoder and state timing decoder logic 24-54
(3) Diagnose register 24-54
24-15. System Initialization Program Load Sequence 24-54

TABLE OF CONTENTS - Continued

Chapter Page

Section III. FUNCTIONING OF IOU 24-56

24-16. Introduction 24-56
24-17. IOU General Organization 24-56
a. IOC 24-56
b. IOX 24-56
c. RTCs 24-56
d. CSIN 24-56
e. Power Supply and Control 24-56
f. Maintenance and Status Control Panel Logic 24-56
24-18. Programmed I/O Instructions 24-56
a. Device Command 24-58
b. Input to Register 24-58
c. Output from Register 24-58
24-19. IOU Interface Networks 24-58
a. MCMU Interface Signals 24-58
b. CPU and CTS Interface Signals 24-58
(1) DEV command 24-58
(2) OFR command 24-58
(3) ITR command 24-58
(4) ITR data strobe 24-58
(5) Command acknowledge 24-58
(6) Input parity 24-58
(7) Device timeout 24-60
(8) Bootstrap 24-60
(9) Stimulate 02 24-60
(10) Stimulate 63 24-60
(11) Level interrupt 24-60
(12) CPU memory timeout 24-60
(13) CPU memory parity error 24-60
(14) CPU stop 24-60
(15) Error alarm set 24-60
(16) Power fail shutdown 24-60
(17) CPU start 24-60
(18) Program load diagnose panel signals 24-60
(19) CTS control signals 24-61
(a) I/O error inhibit 24-61
(b) Parity error inhibit 24-61
(c) TA to data bus 24-61
(d) TD to data bus 24-61
(e) State counter to data bus 24-61
(f) IOC reset 24-61
(g) Memory reset 24-61
(h) IOC step mode 24-61
(i) IOC state step 24-61
(j) RTC inhibit 24-61
(k) Inhibit run 24-61

TABLE OF CONTENTS - Continued

Chapter — Page

c. Peripheral Device Interface Signals 24-61
(1) Information lines 24-61
(a) Operational data 24-61
(b) Address signals 24-61
(c) Control data 24-61
(2) Request lines 24-61
(3) Enable line 24-63
(4) Command line 24-63
(5) Indicator line 24-63
d. IOC to IOX DC I/O Interface 24-63
(1) Input information lines 24-63
(2) Request lines 24-63
(3) Indicator line 24-63
(4) Output information lines 24-63
(5) Channel select lines 24-63
(6) Interrogate line 24-63
(7) Enable line 24-63
(8) Command line 24-63
24-20. IOU Basic Operations 24-63
a. Command I/O Operations 24-65
b. Automatic I/O Operation 24-65
(1) Keyword 24-65
(a) BL, block length field, bit positions 0 thru 10 . . . 24-66
(b) M, mode field, bit positions 11 thru 13 24-66
(c) CA, current address field, bit positions 14 thru 31 24-66
(2) Terminate word 24-66
(a) F, block complete, bit position 0 24-67
(b) I, interrupt, bit position 1 24-67
(c) NPL, normal program level field, bit positions 2 thru 7 24-67
(d) E, transmission error, bit position 8 24-67
(e) R, operational error, bit position 9 24-67
(f) EPL, error program level field, bit positions 10 thru 15 24-67
(g) C, channel end, bit position 16 24-67
(h) P, parity termination, bit position 17 24-67
(i) Q, queue table, bit positions 18 thru 23 24-67
(j) Device status, bit positions 24 thru 31 24-67
(3) Definition of IOX 0 24-68
(a) RTC operation 24-68
(b) CSIN 24-68
(c) Maintenance and status control panel logic 24-68
(d) Memory access matrix 24-68
24-21. Detailed Functional Description of IOC 24-68
a. IOC Data Transfer Logic 24-68
(1) Data transfer register 24-68
(2) I/O register 24-69

TABLE OF CONTENTS - Continued

Chapter | Page

b. IOC Device Priority Logic 24-69
(1) IOX auction 24-69
(2) Device auction 24-69
c. Keyword Selection Decode and Update Logic 24-69
d. Terminate Word Selection and Update Logic 24-70
e. Memory Access Logic 24-70
f. Bootstrap Mode and Diagnostic Self-Test Logic 24-70
g. Clock Generator and State Counter Logic 24-71
(1) CPU command sequence 24-71
(2) Normal automatic input sequence 24-71
(3) Normal automatic output sequence 24-73
h. I/O Command Logic and Drivers 24-73
24-22. Detailed Functional Description of IOX 24-73
a. Block Diagram Description 24-73
(1) Request register 24-73
(2) IOX request switch 24-73
(3) Request OR gate 24-73
(4) DATA EXCHANGE CHANNEL SELECT switch 24-74
(5) Channel interrogate control logic 24-74
(6) Device request gating logic 24-74
(7) I/O control logic 24-74
(8) I/O drivers and receivers 24-74
b. IOX Basic Operation 24-74
24-23. Detailed Functional Description of RTCs 24-75
a. Block Diagram Description 24-75
(1) Frequency divider 24-75
(2) RTC counter 24-75
(3) Clock enable logic 24-75
(4) IOX 0 request logic 24-75
(5) IOC timeout logic 24-75
b. RTC Basic Operation 24-75
(1) RTC 0 operation 24-75
(2) RTC 1 and RTC 2 operation 24-77
24-24. Detailed Functional Description of CSIN 24-77
a. Timing and Control Logic 24-77
b. Parallel-to-Serial Converter 24-77
c. Serial-to-Parallel Converter 24-77
24-25. Detailed Functional Description of Power Supply 24-77
24-26. Detailed Functional Description of Maintenance and Status Panel Control Logic 24-78
a. Monitor Register 24-78
b. Thumbwheel and Discontinuity Logic 24-78
(1) Thumbwheel switches 24-78
(2) Discontinuity logic 24-78
c. Panel Switch Debounce Logic 24-78
d. Panel Lamp Driver Logic 24-81
e. Panel Alarm Logic 24-81

TABLE OF CONTENTS - Continued

Chapter		Page
Section IV.	FUNCTIONING OF MCMU	24-82
24-27.	Introduction	24-82
24-28.	MCMU General Organization	24-82
24-29.	Memory Word Formats	24-82
	a. Data Words	24-82
	b. Address and Control Words	24-82
	(1) Mode selection field	24-82
	(2) Bank address field	24-82
	(3) Word address field	24-82
	c. MBA Words	24-82
	(1) Mode selection field	24-85
	(2) N field	24-85
	(3) C field	24-85
	(4) T field	24-85
24-30.	MCMU Interface Networks	24-85
	a. Information Lines	24-85
	(1) Data words	24-85
	(2) Address and control words	24-85
	(a) Address signals	24-85
	(b) Control signals	24-85
	(3) MBA words	24-85
	b. Address Control Line	24-85
	c. Hold Control Line	24-85
	d. Sync 1 Line	24-88
	e. Sync 2 Line	24-88
	f. Acceptance Line	24-88
	g. Master Reset Line	24-88
	h. Memory Inhibit Line	24-88
	i. Power Failure Line	24-88
24-31.	MCMU Registers	24-88
	a. Bank Address Register	24-88
	b. Word Address Register	24-88
	c. Mode Selection Register	24-88
	d. Data Register	24-88
24-32.	Memory Access Operations	24-90
	a. Memory Access Modes	24-90
	b. Initiation of the Access Operation	24-90
	c. Bank Address Comparison	24-90
	d. Priority Selection	24-90
	e. Timing and Control Functions	24-91
	f. Word Address Decoding	24-91
	g. Read-Restore Operation	24-91
	h. Read-Modify Operation	24-92
	i. Clear-Write Operation	24-93
24-33.	Memory Assignment Operations	24-93
	a. Memory Assignment Submodes	24-93
	b. Initiation of the Assignment Operation	24-93

TABLE OF CONTENTS - Continued

Chapter — Page

c. The Inactive Assignment (C Field = 10) 24-94
d. Inactive State Removal and Bank Address Change (C Field = 11) 24-94
e. Bank Address Change (C = 01) 24-94
f. Memory Test Operation (C = 00) 24-94
g. MBA Operation 24-96
h. Initial Bank Address Generation 24-96
24-34. MCMU Power Control 24-96
a. Temperature Variations 24-97
b. Turnon/Turnoff Protection 24-97

25 AUXILIARY REMOVABLE MEDIA MEMORY AND TAPE TRANSPORT CARTRIDGE FUNCTIONAL DESCRIPTION 25-1

25-1. Introduction 25-1
25-2. TTC Tape Description 25-1
25-3. Block Diagram Description 25-1
25-4. I/O Timing and Control Section 25-1
a. Line Drivers and Receivers 25-1
(1) Write device command 25-1
(2) Read device command 25-3
(3) Space forward block device command 25-3
(4) Space reverse block device command 25-3
(5) Erase forward device command 25-3
(6) Erase reverse device command 25-3
(7) High speed forward device command 25-3
(8) High speed reverse device command 25-4
(9) Rewind-to-load device command 25-4
(10) OFR command 25-4
(11) ITR command 25-4
(12) EOB command 25-4
(13) Device stop command 25-4
b. Output Information Gates 25-4
c. 16-MHz Oscillator 25-4
d. Timing and Control Logic 25-4
e. Input Information Register 25-5
f. Input Parity Check 25-5
g. Input Information Gates 25-5
25-5. Command and Control Section 25-5
a. Device Command Control 25-5
b. Tape Control 25-5
c. Delay Timing Control 25-7
d. Read/Write Control 25-7
e. Motor Speed Control 25-7
25-6. Data Handling Section 25-8
a. I/O Register 25-8
b. Error Status Register and Parity 25-8
c. Operational Status Register and Parity 25-8
d. Read and LRC Register and Vertical Parity 25-8

TABLE OF CONTENTS - Continued

Chapter			Page
		e. Read Comparator	25-9
		f. Write Register and LRC	25-9
		g. Write Current Control	25-9
	25-7.	Control Panel Interface Section	25-9
		a. Lamp Drivers and Switch Buffers	25-9
		b. Manual Control Logic	25-9
	25-8.	TTC Interface Section	25-10
		a. Read and Write Amplifier	25-10
		b. Control Logic Loop Amplifier and Motor Driver	25-10
		c. Write Strobe Protection Logic	25-10
		d. Write Current Amplifier	25-10
		e. Control Logic	25-11
25A	MAGNETIC TAPE UNIT, MAGNETIC TAPE TRANSPORT, AND MAGNETIC TAPE CARTRIDGE FUNCTIONAL DESCRIPTION		25A-1
	25A-1.	Introduction	25A-1
	25A-2.	Overall Description	25A-1
	25A-3.	MTC Tape Description	25A-1
	25A-4.	MTC Functional Description	25A-1
		a. Belt Drive	25A-1
		b. Belt and Tape Velocity	25A-5
		c. Reverse and Removal	25A-5
	25A-5.	MTU Functional Description	25A-5
		a. Computer/MTU Interface	25A-5
		b. MTU Operating Modes	25A-5
		(1) On-line mode	25A-5
		(2) Off-line mode	25A-6
		(a) FORWARD switch	25A-6
		(b) REWIND switch	25A-6
		(c) TEST switch	25A-6
		c. Data Format	25A-6
		(1) Write operation	25A-6
		(2) Interrupt sequence	25A-7
		d. Power Distribution	25A-7
26	DIGITAL DATA TERMINAL FUNCTIONAL DESCRIPTION		26-1
	26-1.	Introduction	26-1
	26-2.	Block Diagram Description	26-1
		a. DDT Transmission	26-1
		(1) Input register	26-1
		(2) Command recognition	26-3
		(3) Output crypto buffer	26-3
		(4) Serial-to-parallel converter	26-3
		(5) Generate preamble, sync, tag	26-3
		(6) Generate check bits.	26-3
		(7) Transmit memory	26-3

TABLE OF CONTENTS - Continued

Chapter — Page

(8) FSK generator 26-3
(9) Modulator 26-3
b. DDT Reception 26-3
(1) Transmit/receive line coupler 26-3
(2) Demodulator 26-3
(3) Sync pattern detector 26-4
(4) Receive memory 26-4
(5) Retime data 26-4
(6) Timing and control 26-4
(7) Error detection and correction 26-4
(8) Parallel-to-serial converter 26-4
(9) Input crypto buffer 26-4
(10) Output register and control 26-4
(11) Error report 26-4

27 REMOTE DATA TERMINAL FUNCTIONAL DESCRIPTION 27-1

27-1. Introduction 27-1
27-2. Functional Interface Description 27-1
27-3. Detailed Block Diagram Description 27-1
a. Clock Generator 27-1
b. Peripheral Interface Buffer 27-1
c. Communications Network Interface 27-1
d. COMSEC Interface 27-1
e. DE Interface 27-1
f. ELP Interface 27-1
g. Front Panel Interface (Red) 27-1
h. Modem Analog Circuitry 27-1
i. Red/Black Isolation Cards 27-1
j. CPU Card 27-3
k. I/O Card 27-3
l. ROM Card 27-3
m. RAM Card 27-3
n. Line Filters 27-3

28 COMMUNICATION CONTROL UNIT FUNCTIONAL DESCRIPTION 28-1

28-1. Introduction 28-1
28-2. Functional Interface Description 28-1
28-3. Detailed Block Diagram Description 28-1
a. Radio Interface 28-1
b. Two-Wire Loop Interface 28-1
c. DDT Interface 28-1
d. Four-Wire Interface 28-1
e. Local Telephone Subscriber and Control Interface 28-1
f. RCMU Interface 28-1
g. Operator Interface 28-4
h. Net Status 28-4
i. Display Status 28-4

TABLE OF CONTENTS - Continued

Chapter			Page
	j.	Central Logic Unit	28-4
	k.	Keyboard	28-4
	l.	Power Supply	28-4
29	REMOTE COMMUNICATIONS MONITOR UNIT FUNCTIONAL DESCRIPTION		29-1
	29-1.	Introduction	29-1
	29-2.	Functional Interface Descriptions	29-1
	29-3.	Detailed Block Diagram Description	29-1
	a.	Clock and Sync Receiver	29-1
	b.	Major and Minor Time Counters	29-1
	c.	Net Busy Decoder Latch	29-1
	d.	Net Busy Drivers	29-1
	e.	Sync Period Flip-Flop	29-1
	f.	Data Receiver	29-1
	g.	Intercom and Local Ring Flip-Flop	29-1
	h.	Shift Register Preset and Control Logic	29-1
	i.	Net MUX Switch	29-4
	j.	Three-Bit Shift Register	29-4
	k.	Line Driver	29-4
	l.	Minor Time Decoder and Clock Enable Decoders	29-4
	m.	Audio Ring Control	29-4
	n.	Speaker Driver and Transformer	29-4
	o.	Ring Drivers	29-4
	p.	Voltage Regulator	29-4
30	SWITCH PANEL ASSEMBLY FUNCTIONAL DESCRIPTION		30-1
	30-1.	Introduction	30-1
	30-2.	Overall Functional Description	30-1
	a.	Channel Interface	30-1
	b.	External Interface to Computer	30-1
		(1) Information lines	30-1
		(2) Request line	30-1
		(3) Enable line	30-1
		(4) Command line	30-1
		(5) Indicator line	30-1
		(6) Interlock line	30-1
	30-3.	Functional Interface Description	30-3
	30-4.	Word and Byte Formats	30-3
	a.	Input Word Format	30-3
		(1) SA channel ITR message format	30-3
		(2) C/E channel ITR message format	30-3
		(3) RD channel ITR message format	30-3
	b.	Output Word Format	30-7
	c.	Device Command Byte Format	30-7
	d.	C/E and RD Channel Interrupt Byte Format	30-7

TABLE OF CONTENTS - Continued

Chapter		Page
30-5.	Detailed Block Diagram Description	30-7
	a. Information Input Parity Check	30-7
	b. Interface Logic	30-7
	c. Address Decode	30-7
	d. CHANNEL SELECT Switch	30-7
	e. Device Command and Address Signal Decoding	30-7
	f. Timing Counter	30-7
	g. IOX Command Flip-Flop	30-7
	h. IOX Enable Command	30-7
	i. Phase Counter	30-7
	j. Master Reset Generator	30-7
	k. Indicator Generator	30-7
	l. Receive Channel Request	30-7
	m. Switch Assembly Channel Request	30-7
	n. Compose/Edit Channel Request	30-7
	o. Data Load and Decode Clocks	30-11
	p. Receive Channel Timing	30-11
	q. Compose/Edit Channel Timing	30-11
	r. Data Gates and Parity Generator	30-11
	s. ITR Signal Timing	30-11
	t. Switch Debounce Logic	30-11
	u. Receive Device Command Data Output Register	30-11
	v. Compose/Edit Device Command Data Output Register	30-11
	w. Receive Device Command Decode	30-11
	x. Compose/Edit Device Command Decode	30-11
	y. OFR Signal Decode	30-11
	z. Fault and Character Non-Transfer Detect and Parity Error Bits	30-11
	aa. Format Command Matrix Row Switches Register, Gating, and Lamps	30-11
	ab. Format Command Matrix Column Switches Register, Gating, and Lamps	30-11
	ac. Receiver DC Interface Logic	30-11
	ad. Compose/Edit DC Interface Logic	30-11
	ae. SPA Front-Panel Indicators	30-12
	af. Compose/Edit Switches Register and Gating	30-12
	ag. RD Switches Register and Gating	30-12
	ah. Test and Command Switches Register and Gating	30-12
	ai. Address Switches Register, Gating, and Lamps	30-12
30-6.	Control Sequences	30-12
	a. Automatic Input	30-12
	b. Automatic Output	30-12
	c. DEV Command Sequence	30-12
	(1) Transmit from cursor	30-12
	(2) Prepare to receive	30-12
	(3) Clear DE	30-12
	(4) Transmit from top	30-12
	(5) Ignore EOT when XMIT	30-13
	d. Interrupt (Indicator) Sequence	30-13

TABLE OF CONTENTS - Continued

Chapter			Page
		e. ITR Sequence	30-13
		f. OFR Sequence	30-13
		g. EOB Sequence	30-13
		h. Master Reset	30-13
		i. Device Stop	30-13
	30-7.	Receive Sequences	30-13
	30-8.	Transmit Sequences	30-14
31		DISPLAY EDITOR FUNCTIONAL DESCRIPTION	31-1
	31-1.	Introduction	31-1
	31-2.	DE Operating Modes	31-1
		a. Receive Mode	31-1
		b. Refresh Mode	31-1
		c. Tabulate	31-1
		d. Transmit Mode	31-3
		e. Clear Mode	31-3
	31-3.	DE Overall Block Diagram Description	31-3
		a. ACC DE	31-3
		b. VFMED DE	31-3
		c. Overall Block Diagram Description	31-3
		(1) Display processor	31-3
		(2) Display generator	31-5
		(3) Magnetic deflection and video circuits	31-5
		(4) Power supply and power control circuits	31-5
	31-4.	DE Detailed Block Diagram Description	31-5
		a. Display Processor	31-5
		(1) State counter	31-5
		(2) I/O buffer	31-5
		(3) Cursor counter	31-7
		(4) Display I/O controller	31-7
		b. Display Generator	31-7
		(1) Refresh memory	31-7
		(2) Address multiplexer and converter	31-7
		(3) ASCII data converter	31-8
		(4) Font memory	31-8
		(5) Z-axis register	31-8
		(6) Cursor generator	31-8
		(7) Refresh counter	31-8
		(a) Dot counter	31-8
		(b) Row counter	31-8
		(c) Line counter	31-9
		(d) Column counter	31-9
		c. Magnetic Deflection and Video Circuits	31-9
		(1) Slow-axis sweep generator	31-9
		(2) Fast-axis sweep generator	31-9
		(3) Video switch	31-9
		d. Power Supply and Power Control Circuits	31-9
		(1) Dc/dc converter	31-9

TABLE OF CONTENTS - Continued

Chapter			Page
		(2) High voltage power supply	31-9
		(3) Power control circuit	31-9
	31-5.	Detailed Description of DE Operating Modes	31-10
		a. Refresh Mode	31-10
		b. Receive Mode	31-11
		c. Transmit Mode	31-11
		d. Clear Mode	31-11
		e. Tabulate Mode	31-11
32		ALPHANUMERIC EDITOR KEYBOARD, FUNCTIONAL DESCRIPTION	32-1
	32-1.	Introduction	32-1
	32-2.	Overall Functional Description	32-1
		a. Keyboard Matrix	32-1
		b. Column Signal Generation	32-1
		c. Row Signal Generation	32-1
		d. Read Only Memory	32-1
		e. Pulse and DC Control Functions	32-1
		(1) Pulse Signals	32-1
		(2) DC Signals	32-5
		f. Timing and Control	32-5
		g. Miscellaneous Functions	32-5
		(1) DE power control	32-5
		(2) XMIT indicator	32-5
		(3) COMPOSE MODE control	32-5
		(4) AUX I/O control	32-5
		(5) REPEAT control	32-5
33		ELECTRONIC LINE PRINTER FUNCTIONAL DESCRIPTION	33-1
	33-1.	Introduction	33-1
	33-2.	Overall Functional Description	33-1
		a. Printer Mechanism (fig. 33-1)	33-1
		b. Line Printer Interface Logic (LPIL) AC (FO-7)	33-1
		c. LPIL Data	33-3
		d. LPIL Timing	33-3
		e. LPIL Control	33-3
		f. Line Printer Interface	33-3
		g. RAM/ROM Character Memory	33-4
		h. Printer Control Logic	33-4
		i. Printer Timing Logic	33-4
		j. Printer Helix Drivers	33-5
		k. Printer Motor Drivers	33-5
34		DIGITAL PLOTTER MAP FUNCTIONAL DESCRIPTION	34-1
	Section I.	INTRODUCTION	34-1
	34-1.	Introduction	34-1

TABLE OF CONTENTS - Continued

Chapter		Page
34-2.	Purpose and Use	34-1
34-3.	Configuration	34-1
34-4.	Display Plotting Unit	34-1
	a. Plotting Mechanism	34-2
	b. Plotting Capabilities	34-2
	c. Plotting Drive	34-2
34-5.	Hand-Held Controller	34-2
34-6.	Performance Under Computer Control	34-2
34-7.	Map Storage	34-2
Section II.	OVERALL FUNCTIONAL DESCRIPTION	34-6
34-8.	DPM System Functions	34-6
34-9.	DPM Block Diagram Analysis	34-6
	a. Electronic Controller Function	34-6
	(1) Input register and control	34-6
	(2) Routing and control matrices	34-6
	(3) Character generator and memory	34-6
	(4) X-Y servo control and hand-held controller	34-6
	b. Electronic Drive Function	34-8
	(1) Digital-to-analog converters	34-8
	(2) Potentiometer	34-8
	(3) Null detector	34-8
	(4) Tachometer generator	34-8
	c. Electromechanical Plotting Board Function	34-8
	(1) East-west movement	34-8
	(2) North-south movement	34-8
	(3) Write head	34-8
	d. Power Supply Function	34-8
Section III.	DETAILED FUNCTIONAL DESCRIPTION	34-9
34-10.	Introduction	34-9
34-11.	Electronic Controller	34-9
	a. Device Control Words	34-9
	(1) Device command	34-9
	(2) Output from register (OFR)	34-9
	(3) Input to register (ITR)	34-9
	(4) End of block (EOB)	34-11
	(5) Device stop	34-11
	b. Output From Register (OFR) (fig. 34-5)	34-11
	c. Control Word (fig. 34-6)	34-11
	d. Position Word (fig. 34-7)	34-11
	e. Character Word (fig. 34-8)	34-11
	(1) Character libraries	34-11
	(2) Four character group	34-11
	(3) Character field matrix (fig. 34-9)	34-11
	f. ITR-1 (fig. 34-10)	34-11
	g. ITR-2 (fig. 34-11)	34-18

TABLE OF CONTENTS - Continued

Chapter		Page
	h. ITR-3 (fig. 34-12)	34-18
	i. Command	34-18
	j. Enable	34-18
	k. Request	34-18
	l. Indicator	34-18
34-12.	Controller Functions (FO-8)	34-18
	a. Information Lines	34-18
	b. Data Receivers and Data Drivers	34-18
	c. I/O State Generator	34-18
	d. I/O Strobe Generator	34-21
	e. I/O Register	34-21
	f. Parity Logic	34-21
	g. Operand Register	34-21
	h. X and Y Adders and Analog Registers	34-21
	i. Reticle Displacement Circuit	34-22
	j. Row/Column Decoders	34-22
	k. DPU Control Logic	34-23
	l. Memory	34-23
	m. Address Register and Data Register	34-23
	(1) Character generation	34-23
	(2) Special symbol generation	34-24
	n. Stepper Reset Counter	34-25
	o. Servo Control Logic	34-25
	p. 16 MHz Oscillator	34-25
	q. Frequency Dividers	34-25
	(1) Frequency divider	34-25
	(2) Null delay timer	34-25
	(3) X-Y stepper wave shaper	34-26
	(4) Solenoid timer	34-26
34-13.	DPM Electronic Drive System (fig. 34-13)	34-26
34-14.	D/A Circuit Description (fig 34-14)	34-26
	a. Input Buffer	34-26
	b. D/A Ladder Switch	34-26
	c. Output Amplifier	34-29
	d. Reference Generator Amplifier	34-29
	e. Reference Buffer Amplifier	34-29
	f. Resistors R1, R2, and R3	34-29
34-15.	Servo System Description (fig. 34-15)	34-29
	a. Servo Amplifier	34-29
	(1) DC differential amplifier	34-29
	(2) DC chopper driver amplifier	34-29
	(3) Chopper	34-29
	(4) Phase shift amplifier	34-29
	(5) Tachometer feedback amplifier	34-31
	(6) Output power amplifier	34-31
	(7) Feedback amplifier	34-31
	b. Null Detecting System	34-31
	(1) DC null amplifier	34-31
	(2) Inverter	34-31

TABLE OF CONTENTS - Continued

Chapter Page

(3) Comparator number 1 and comparator number 2 34-31
(4) Comparator number 2 offset. 34-32
c. Servo Motor, Tachometer and Follower Potentiometer (fig. 34-16) 34-32
(1) Servo motor 34-32
(2) Slip clutch. 34-32
(3) Gearhead 34-32
(4) Tachometer. 34-32
(5) Follower potentiometer 34-32
34-16. Solenoid System (fig. 34-17). 34-32
a. Signals 34-32
b. Logic Chain. 34-32
34-17. Stepper System (fig. 34-18) 34-35
a. Stepper Driver. 34-35
(1) Phase set flip-flop 34-35
(2) Phase generator. 34-35
(3) Steering logic 34-35
(4) Output drivers 34-35
b. Stepper Motor 34-35
c. Gearhead 34-35
34-18. DC to AC Inverter (fig. 34-19) 34-37
a. Input Filter. 34-37
b. Voltage Step-Up Circuit. 34-37
c. Preregulator Oscillator (A1) 34-37
(1) Differential amplifier 34-37
(2) Oscillator 34-37
d. 400 Hz Drive Amplifier (A2). 34-37
(1) Shunt regulator 34-37
(2) 800 Hz oscillator 34-37
(3) 400 Hz flip-flop 34-37
(4) Drive amplifier 34-37
e. Signal Conditioner and Logic Control (A3). 34-37
(1) Shunt regulator 34-37
(2) Signal conditioner. 34-39
(3) Drive inhibit 34-39
f. Over Voltage and Over Current Sensor (A4) 34-39
(1) Shunt regulator 34-39
(2) OC sense circuit 34-39
(3) OC delay. 34-39
(4) OV sense circuit 34-39
(5) OV delay. 34-39
g. Power Amplifier 34-39

35 ELECTRONIC TACTICAL DISPLAY FUNCTIONAL DESCRIPTION 35-1

Section I. INTRODUCTION. 35-1

35-1. Overall Functional Description 35-1
a. ETD Controls 35-1
b. Light Pen 35-1

TABLE OF CONTENTS - Continued

Chapter		Page
Section II.	ETD-TO-COMPUTER COMMUNICATION EXCHANGE	35-3
35-2.	Introduction	35-3
	a. Information Lines	35-3
	(1) Address selection	35-3
	(2) Data signals	35-3
	b. Request Line	35-3
	c. Command Line	35-3
	d. Enable Line	35-3
	e. Indicator Line	35-3
	f. Interlock Line	35-3
35-3.	Communication Formats	35-5
	a. OFR Word Format	35-5
	b. Control Word Format	35-5
	c. Position (Situation) Word Format	35-5
	d. Character Word Format	35-5
	(1) ASCII (alphanumeric) character library	35-5
	(2) Symbol character library	35-5
	(3) Special symbols	35-5
	(4) Character field matrix	35-5
35-4.	Interface Data Sequencing	35-14
	a. Automatic Output Mode	35-14
	b. ITR Interrupt Mode	35-14
	c. Clocking Data Transfers	35-14
35-5.	Display Site/Word Groups	35-14
	a. Situation/Line Data	35-14
	b. Offset Point Data	35-14
	c. Tabular Data	35-14
35-6.	ETD to Computer Messages	35-14
35-7.	Word Content and Usage	35-14
Section III.	DETAILED FUNCTIONAL DESCRIPTION	35-26
35-8.	ETD Overall Description	35-26
	a. Light Pen Data	35-26
	b. ETD to Computer Data	35-26
35-9.	ETD Block Diagram Description	35-26
	a. Display Programmer	35-26
	b. Display Controller	35-27
	c. Character Generator	35-27
	d. Analog Circuits	35-27
	(1) Line and position circuits	35-27
	(2) X and Y stroke integrator circuits	35-27
	(3) Video compensation and amplifier circuits	35-27
	(4) Crt display circuits and controls	35-27
35-10.	Display Programmer Detailed Description	35-28
	a. Input Receivers and Output Drivers	35-28
	b. Byte Storage Circuits	35-28
	c. Clock Generator	35-28
	d. Receive Timing Control	35-28

Chapter Page

e. Address and Parity Check Circuits 35-29
f. Command and Enable Circuits 35-29
g. Mode Control Gating Circuits 35-29
h. Phase Counter 35-29
i. Transfer Counter 35-29
j. Indicator Generator 35-29
k. Request Generator 35-29
l. Light Pen Input Gating 35-30
m. Character Counter 35-30
n. ITR Selection Counter 35-30
o. ITR Gating Circuits 35-30
p. I/O Register 35-30
q. Load and Shift Control Circuits 35-32
r. Symbol Hold Register 35-32
s. Category Compare Circuits and Displayability Decision Circuits 35-32
t. Word Type Circuits 35-33
u. ITR Timing Counter 35-33
v. Parity Generator 35-33
w. ITR Output Gating Circuits 35-33

35-11. Display Controller Detailed Description 35-33
a. Display Data and Type Code Circuits 35-33
b. Offset Storage Register 35-33
c. Process Loop Definition and Control Circuits 35-35
d. Offset Adder 35-35
e. Bit-Time Counter and Decoder 35-35
f. Character Field Generator 35-35
g. Box/Flagstaff Generator 35-36
h. Position Scaling Register 35-36
i. Adder 35-36
j. Line Coordinate Register 35-36
k. Line Writing Rate Video Compensation 35-36
l. Displayability Determination Circuits 35-37
m. Diagnostic Register 35-37
n. Clock Pulse Generator 35-37

35-12. Symbol/Character Generator Detailed Description 35-37
a. Display Memory 35-37
b. Address Gating Circuits 35-39
c. OR Gating and Inverter Circuits 35-39
d. Binary Update Counter 35-39
e. Instruction Register 35-39
f. Timing Logic 35-39
g. Mode Control Circuits 35-39
h. Cycle Initiate Circuits 35-40

35-13. Analog Circuits Detailed Description 35-40
a. Line and Position Circuits 35-40
(1) Line generator and control 35-40
(2) Line digilog/buffer 35-40
(3) Position digilog 35-40
(4) Summation amplifier 35-40

TABLE OF CONTENTS - Continued

Chapter — Page

b. X- and Y-Stroke Integrators 35-40
c. Video Compensation and Amplifier Circuits 35-43
(1) Video compensation 35-43
(2) Video amplifier 35-43
d. CRT Display Circuits and Controls 35-43
(1) Deflection amplifiers 35-43
(2) Focus and astigmatism amplifiers. 35-43
(3) High voltage power supply 35-43
(4) Light pen and light pen processor 35-46
(5) Low voltage power supply 35-46
35-14. Power Control Description. 35-46

36 POWER CONVERTER GROUP FUNCTIONAL DESCRIPTION 36-1

36-1. Power Interface 36-1
36-2. Overall Functioning 36-1
a. AC Prime Power 36-1
b. DC Prime Power 36-1
c. Emergency Power 36-3
d. Ac and Dc Prime Power 36-3
36-3. Detailed Functioning 36-3
a. Functioning with Ac Power. 36-3
b. Functioning with Dc Power. 36-4
(1) Dc power source A 36-4
(2) Dc power source B 36-5
c. Functioning with Battery Power 36-5
d. Functioning of Dc/Dc Converter 36-6

37 COMMUNICATIONS TERMINAL BOX FUNCTIONAL DESCRIPTION . . . 37-1

37-1. Introduction. 37-1
37-2. Functional Description 37-1

38 COMMUNICATIONS JUNCTION BOX FUNCTIONAL DESCRIPTION. . . . 38-1

38-1. Introduction. 38-1
38-2. Functional Description 38-1

39 MODULE TEST SET FUNCTIONAL DESCRIPTION. 39-1

Section I. OVERALL FUNCTIONAL DESCRIPTION 39-1

39-1. Scope 39-1
39-2. Introduction. 39-1
39-3. Card Identification 39-1
39-4. Card Tests 39-1
a. +5V Logic Short 39-1
b. Short-to-Ground. 39-4

TABLE OF CONTENTS - Continued

Chapter			Page
		c. Continuity Tests	39-4
		d. Functional Tests	39-4
	39-5.	Fault Display	39-4
	39-6.	Fault Display Interpretation	39-4
	39-7.	Self Test	39-4
		a. Self Test	39-4
		b. Lamp Test	39-5
		c. Power Supply Fault Indicator	39-5
	Section II.	DETAILED FUNCTIONAL DESCRIPTION	39-7
	39-8.	Introduction	39-7
	39-9.	Timing	39-7
	39-10.	Cycling Logic	39-7
	39-11.	Line Switch Logic	39-7
	39-12.	Line and Circuit Selection Logic	39-7
	39-13.	Error Detection Logic	39-7
	39-14.	Controls and Displays Circuits	39-7
40		PASSIVE MAINTENANCE DEVICE FUNCTIONAL DESCRIPTION	40-1
	40-1.	Introduction	40-1
	40-2.	Functional Description	40-1

TABLE OF CONTENTS

Chapter

Page

LIST OF ILLUSTRATIONS lxvii
LIST OF TABLES lxx

VOLUME 3

41 INTRODUCTION. 41-1

41-1. Scope 41-1

42 DIRECT SUPPORT GENERAL MAINTENANCE 42-1

Section I. INTRODUCTION. 42-1

42-1. Scope 42-1
42-2. Authorized Maintenance. 42-1
42-3. Authorized Adjustments. 42-1
42-4. Replacement Parts 42-1

Section II. SHIPMENT AND LIMITED STORAGE 42-2

42-5. Shipment and Limited Storage. 42-2

Section III. TOOLS, TEST EQUIPMENT, AND MATERIALS 42-3

42-6. Tools, Test Equipment, and Materials 42-3
42-6A. Special Test Equipment 42-3
42-6B. Passive Maintenance Device. 42-3
42-6C. PMD Panel Elements 42-3

Section IV. GENERAL MAINTENANCE PROCEDURES 42-10C

42-7. Inspection 42-10C

Section V. GENERAL TROUBLESHOOTING PROCEDURES 42-12

42-8. Introduction. 42-12
42-9. Cable Assemblies. 42-12

Section VI. GENERAL REPAIR PROCEDURES 42-15

42-10. Introduction. 42-15
42-11. Removal and Replacement of Safety Relief Valve 42-15
a. Removal 42-15
b. Replacement 42-15
42-12. Removal and Replacement of Pushbutton Switch 42-15
a. Removal 42-15
b. Replacement 42-15

TABLE OF CONTENTS - Continued

Chapter

Page

42-13. Removal and Replacement of Lampholder 42-16A
a. Removal 42-16A
b. Replacement 42-19
42-14. Removal and Replacement of Toggle Switch 42-19
a. Removal 42-19
b. Replacement 42-19
42-15. Removal and Replacement of Stepping Switch. 42-19
a. Removal 42-19
b. Replacement 42-19
42-16. Removal and Replacement of Rotary Switch. 42-19
a. Removal 42-23
b. Replacement 42-23
42-17. Removal and Replacement of Potentiometer 42-23
a. Removal 42-23
b. Replacement 42-23
42-18. Removal and Replacement of Time Meter 42-23
a. Removal 42-23
b. Replacement 42-23
42-19. Repair of Broken Wire-Wrap Wiring 42-26
42-20. Card Cage Troubleshooting 42-26A
42-21. Use of PMD for Fault Isolation 42-26A
a. Continuity Fault (Typical) 42-26A
b. +5v LOGIC SHORT Fault (Typical). 42-26B
c. GROUND Fault (Typical) 42-26B
d. FUNCTIONAL Fault (Typical). 42-26C

Section VII. WIRE LISTS 42-28

42-22. Scope 42-28
42-23. Connector List 42-28
42-24. String List 42-28
42-25. Double Entry List 42-28
42-26. Wiring Fault Isolation 42-28
42-27. Logic List. 42-37
42-28. Wire Information 42-37
42-29. Wire List Index 42-37

43 COMPUTER DIRECT SUPPORT MAINTENANCE 43-1

Section I. TROUBLESHOOTING 43-1

43-1. Introduction. 43-1
43-2. Troubleshooting Techniques 43-1
43-3. Visual Inspection 43-1
43-4. Computer Tests 43-1

TABLE OF CONTENTS - Continued

Chapter		Page
Section II.	REPAIR	43-2
43-5.	Introduction	43-2
43-6.	CPU Repair	43-3
	a. Removal of Connector Protective Cover	43-3
	b. Replacement of Connector Protective Cover	43-3
	c. Opening of Front Panel	43-3
	d. Closing of Front Panel	43-3
43-7.	IOU Repair	43-3
	a. Removal and Replacement of Connector Protective Cover	43-3
	b. Removal of Warning Horn	43-4

TABLE OF CONTENTS - Continued

Chapter — Page

c. Replacement of Warning Horn. 43-4
d. Opening of Front Panel 43-4
e. Closing of Front Panel 43-4
43-8. MCMU Repair 43-4
a. Removal of Core Stack Assembly 43-4A
b. Replacement of Core Stack Assembly. 43-4A
c. Front Panel Removal 43-4A
d. Front Panel Replacement. 43-4B

44 AUXILIARY REMOVABLE MEDIA MEMORY DIRECT SUPPORT MAINTENANCE 44-1

Section I. TROUBLESHOOTING 44-1

44-1. Introduction 44-1
44-2. Troubleshooting Techniques 44-1
44-3. Visual Inspection 44-1
44-4. Troubleshooting Procedures 44-1

Section II. REPAIR 44-2

44-5. Introduction. 44-2
44-6. Removal and Replacement of Front Panel 44-2
a. Front Panel Removal 44-2
b. Front Panel Replacement 44-2A
44-7. Repair Verification. 44-2A

44A MAGNETIC TAPE UNIT DIRECT SUPPORT MAINTENANCE 44A-1

Section I. TROUBLESHOOTING 44A-1

44A-1. Introduction 44A-1
44A-2. Troubleshooting Techniques 44A-1
44A-3. Visual Inspection 44A-1
44A-4. Troubleshooting Procedures 44A-1
44A-5. MTT Power Fault Troubleshooting 44A-5

Section II. REPAIR 44A-8

44A-6. Introduction 44A-8
44A-7. Removal and Replacement of MTT 44A-8
a. Removal. 44A-8
b. Replacement 44A-8
44A-8. Removal and Replacement of MTT Power Supply 44A-8A
a. Removal. 44A-8A
b. Replacement 44A-9
44A-9. Removal and Replacement of MTT Power Filter 44A-9
a. Removal. 44A-9
b. Replacement 44A-9

TABLE OF CONTENTS - Continued

Chapter

Page

44A-10. Removal and Replacement of MTT Power Amplifier 44A-9
a. Removal 44A-9
b. Replacement 44A-9
44A-11. Removal and Replacement of MTT Capstan Motor 44A-10
a. Removal 44A-10
b. Replacement 44A-10
44A-12. Removal and Replacement of MTT Microswitches 44A-10
a. Removal 44A-10
b. Replacement 44A-10
44A-13. Removal and Replacement of MTC Drive Belt 44A-10
a. Removal 44A-10
b. Replacement 44A-11
44A-14. Removal and Replacement of Captive Screw Assembly 44A-11
a. Removal 44A-11
b. Replacement 44A-11
44A-15. Repair Verification 44A-11

Section III. ALIGNMENT 44A-12

44A-16. Introduction 44A-12
44A-17. Preliminary 44A-12
44A-18. Strip Sense Adjustment 44A-12
44A-19. Hole Sense Adjustment 44A-14
44A-20. Low-Tape Sense Adjustment 44A-14

45 DIGITAL DATA TERMINAL MAINTENANCE 45-1

Section I. TROUBLESHOOTING 45-1

45-1. Introduction 45-1
45-2. Troubleshooting Techniques 45-1
45-3. Visual Inspection 45-1
45-4. DDT Troubleshooting 45-1

Section II. REPAIR 45-2

45-5. Introduction 45-2
45-6. Removal and Replacement of Fault Isolation Assembly 45-2
a. Removal 45-2
b. Replacement 45-2
45-7. Front Panel Component Access 45-2
a. Removal of Front Panel 45-2
b. Replacement of Front Panel 45-2

46 REMOTE DATA TERMINAL DIRECT SUPPORT MAINTENANCE 46-1

TABLE OF CONTENTS - Continued

Chapter			Page
	Section I.	TROUBLESHOOTING	46-1
	46-1.	Introduction	46-1
	46-2.	Troubleshooting Techniques	46-1
	46-3.	Visual Inspection	46-1
	46-4.	Troubleshooting Procedures	46-1
	46-5.	Front Panel Checkout	46-1
	46-6.	Resistance Measurements	46-1
		a. ENCRYPT, BPS, and BLOCK MODE Toggle Switches	46-1
		b. NET ACCESS Switch	46-2
		c. MODE Switch	46-2
		d. HDST VOL, ALARM VOL, and BRT Controls	46-2
		e. Indicators	46-2
	Section II.	REPAIR	46-5
	46-7.	Introduction	46-5
	46-8.	Removal and Replacement of Electrical Connector Bracket	46-5
		a. Removal	46-5
		b. Replacement	46-5
	46-9.	Removal and Replacement of Electrical Warning Horn	46-5
		a. Removal	46-5
		b. Replacement	46-6
	46-10.	Removal and Replacement of Electronic Components Assembly	46-6
		a. Removal	46-6
		b. Replacement	46-7
	46-11.	Removal and Replacement of Front Panel Assembly	46-7
		a. Removal	46-7
		b. Replacement	46-7
	46-12.	Removal and Replacement of Captive Screw Assembly	46-7
		a. Removal	46-7
		b. Replacement	46-7
47		COMMUNICATION CONTROL UNIT DIRECT SUPPORT MAINTENANCE	47-1
	Section I.	TROUBLESHOOTING	47-1
	47-1.	Introduction	47-1
	Section II.	REPAIR	47-2
	47-2.	Introduction	47-2
	47-3.	Removal and Replacement of Front Panel	47-2
		a. Removal of Left-Hand Card Cage	47-2
		b. Replacement of Left-Hand Card Cage	47-2
		c. Removal of Right-Hand Card Cage	47-3
		d. Replacement of Right-Hand Card Cage	47-3
	47-4.	Removal and Replacement of Horn	47-3
		a. Removal	47-3
		b. Replacement	47-3

TABLE OF CONTENTS - Continued

Chapter

Page

47-5. Removal and Replacement of Indicator Light 47-3
a. Removal 47-3
b. Replacement 47-4
47-6. Removal and Replacement of Lamp Housing 47-4
a. Removal 47-4
b. Replacement 47-4
47-7. Repair Verification 47-4

48 REMOTE COMMUNICATIONS MONITOR UNIT DIRECT SUPPORT MAINTENANCE 48-1

Section I. TROUBLESHOOTING 48-1

48-1. Introduction 48-1
48-2. Troubleshooting Techniques 48-1
48-3. Visual Inspection 48-1
48-4. Troubleshooting Procedures 48-1

Section II. REPAIR 48-2

48-5. Introduction 48-2
48-6. Access to Panel-Mounted Components 48-2
48-7. Removal and Replacement of Lampholders XDS1 thru XDS10 48-2
a. Removal 48-2
b. Replacement 48-2
48-8. Removal and Replacement of Rotary Switches S1 thru S10 48-3
a. Removal 48-3
b. Replacement 48-3
48-9. Removal and Replacement of Variable Resistors R1 and R2 48-7
a. Removal 48-7
b. Replacement 48-7
48-10. Removal and Replacement of Cable Strap 48-8
a. Removal 48-8
b. Replacement 48-8
48-11. Repair Verification 48-8

49 SWITCH PANEL ASSEMBLY DIRECT SUPPORT MAINTENANCE 49-1

Section I. TROUBLESHOOTING 49-1

49-1. Introduction 49-1

Section II. REPAIR 49-2

49-2. Introduction 49-2
49-3. Removal and Replacement of Front Panel 49-2
a. Removal 49-2
b. Replacement 49-3

TABLE OF CONTENTS - Continued

Chapter			Page
50		DISPLAY EDITOR DIRECT SUPPORT MAINTENANCE	50-1
	Section I.	TROUBLESHOOTING	50-1
	50-1.	Introduction	50-1
	50-2.	Troubleshooting Techniques	50-1
	50-3.	Visual Inspection	50-1
	50-4.	DE Test and Troubleshooting	50-1
	Section II.	REPAIR	50-2
	50-5.	Introduction	50-2
	50-6.	Removal and Replacement of Magnetic-Deflection Amplifier	50-2
		a. Removal	50-2
		b. Replacement	50-2
	50-7.	Removal and Replacement of High Voltage Power Supply	50-3
		a. Removal	50-3
		b. Replacement	50-3
	50-8.	Removal and Replacement of HV Adjustment Knob	50-3
		a. Removal	50-3
		b. Replacement	50-3
	50-9.	Removal and Replacement of Bezel Assembly and CRT	50-4
		a. Removal	50-4
		b. Replacement	50-4
	50-10.	Removal and Replacement of Deflection Coil	50-4
		a. Removal	50-4
		b. Replacement	50-5
	50-11.	Removal and Reinstallation of Tube Shield Assembly	50-5
		a. Removal	50-5
		b. Reinstallation	50-5
	50-12.	Removal and Replacement of Fault Indicator	50-5
		a. Removal	50-5
		b. Replacement	50-6
	50-13.	Removal and Replacement of Brightness Control	50-6
		a. Removal	50-6
		b. Replacement	50-6
	50-14.	Removal and Replacement of Focus Control	50-6
		a. Removal	50-6
		b. Replacement	50-6
	50-15.	Removal and Replacement of Mode or Test Switch	50-6
		a. Removal	50-6
		b. Replacement	50-6
	50-16.	Removal and Replacement of High Voltage Interlock Switch	50-7
		a. Removal	50-7
		b. Replacement	50-7
	50-17.	Test After Repair	50-7

TABLE OF CONTENTS - Continued

Chapter Page

51 ALPHANUMERIC EDITOR KEYBOARD DIRECT SUPPORT MAINTENANCE 51-1

Section I. TROUBLESHOOTING 51-1

51-1. Introduction 51-1
51-2. Troubleshooting Techniques 51-1

TABLE OF CONTENTS - Continued

Chapter			Page
	51-3.	Visual Inspection	51-1
	51-4.	Keyboard Assembly Troubleshooting	51-1
	Section II.	REPAIR	51-5
	51-5.	Introduction	51-5
	51-6.	Removal and Replacement of Logic Circuit Card A2	51-5
		a. Removal	51-5
		b. Replacement	51-5
	51-7.	Removal and Replacement of Keyboard Assembly Circuit Card A1	51-5
		a. Removal	51-5
		b. Replacement	51-5
	51-8.	Removal and Replacement of Key Cap	51-6
		a. Removal	51-6
		b. Replacement	51-6
	51-9.	Removal and Replacement of Key Assembly or Retainer	51-6
		a. Removal	51-6
		b. Replacement	51-6
	51-10.	Removal and Replacement of Space Bar	51-6
		a. Removal	51-6
		b. Replacement	51-7
	51-11.	Removal and Replacement of Toggle Switch	51-7
		a. Removal	51-7
		b. Replacement	51-7
	51-12.	Removal and Replacement of Potentiometer	51-7
		a. Removal	51-7
		b. Replacement	51-7
52		ELECTRONIC LINE PRINTER DIRECT SUPPORT MAINTENANCE	52-1
	Section I.	TROUBLESHOOTING	52-1
	52-1.	Introduction	52-1
	52-2.	Troubleshooting Techniques	52-1
	52-3.	Visual Inspection	52-1
	52-4.	ELP M&D FI Tests	52-2
	52-5.	ELP Manual Troubleshooting	52-2
	52-6.	Test After Repair	52-3
	Section II.	REPAIR	52-4
	52-7.	Introduction	52-4
	52-7A.	Service Position	52-4
	52-8.	Removal and Replacement of Lampholders	52-4
		a. Removal	52-4
		b. Replacement	52-5
	52-9.	Removal and Replacement of TEST and PAPER FEED Pushbutton Switches	52-5
		a. Removal	52-5
		b. Replacement	52-5

TABLE OF CONTENTS - Continued

Chapter		Page
52-10.	Removal and Replacement of POWER Pushbutton Switch	52-5
	a. Removal	52-5
	b. Replacement	52-5
52-11.	Removal and Replacement of CHAN SEL Rotary Switch and LAMP BRT Potentiometer	52-5
	a. Removal	52-5
	b. Replacement	52-6
52-12.	Removal and Replacement of Dust Tray Assembly and Associated Parts	52-6
	a. Removal	52-6
	b. Replacement	52-6
52-13.	Removal and Replacement of Tension Latches	52-6
	a. Removal	52-6
	b. Replacement	52-6
52-14.	Removal and Replacement of Keeper Latches	52-6
	a. Removal	52-6
	b. Replacement	52-6
52-15.	Removal and Replacement of Interlock Switch	52-7
	a. Removal	52-7
	b. Replacement	52-7
52-16.	Removal and Replacement/Alignment of Paper Low Switch	52-7
	a. Removal	52-7
	b. Replacement/Alignment	52-7
52-17.	Removal and Replacement/Alignment of Paper Out Switch	52-8
	a. Removal	52-8
	b. Replacement/Alignment	52-9
52-18.	Removal and Replacement of Paper Load Switch	52-10
	a. Removal	52-10
	b. Replacement	52-10
52-19.	Removal and Replacement of Skip-Fold Switch	52-10
	a. Removal	52-10
	b. Replacement	52-10A
52-20.	Removal and Replacement/Alignment of Magnetic Sensor	52-10A
	a. Removal	52-11
	b. Replacement/Alignment	52-11
52-21.	Removal and Replacement of Paper Cutter Guide	52-12
	a. Removal	52-12
	b. Replacement	52-12
52-22.	Removal and Replacement of I/O Power Extension Cable	52-12
	a. Removal	52-12
	b. Replacement	52-12
52-23.	Removal and Replacement of Control Panel Extension Cable	52-12
	a. Removal	52-12
	b. Replacement	52-13
52-24.	Removal and Replacement of Helix Motor Drive Components	52-13
	a. Removal	52-13
	b. Replacement	52-13

TABLE OF CONTENTS - Continued

Chapter			Page
	52-25.	Removal and Replacement of Stepper Motor Drive Components	52-14
		a. Removal	52-14
		b. Replacement	52-14
	52-26.	Removal and Replacement of Time Meter	52-16
		a. Removal	52-16
		b. Replacement	52-16
	52-27.	Removal and Replacement of Rear Guide Assembly	52-16
		a. Removal	52-16
		b. Replacement	52-18
	52-28.	Removal and Replacement of Guide Gasket	52-18
		a. Removal	52-18
		b. Replacement	52-18
53		DIGITAL PLOTTER MAP DIRECT SUPPORT MAINTENANCE	53-1
	Section I.	TROUBLESHOOTING	53-1
	53-1.	Introduction	53-1
	53-2.	Authorized Adjustments	53-1
	53-3.	Inspection	53-1
	53-4.	Troubleshooting	53-1

TABLE OF CONTENTS - Continued

Chapter		Page
Section II.	REPAIR	53-14
53-5.	Introduction	53-14
53-6.	General Repair Procedures	53-14
53-7.	Removal and Replacement of DPU Components	53-15
	a. Removal and Replacement of Control Panel Assembly	53-15
	(1) Removal	53-15
	(2) Replacement	53-15
	b. Removal and Replacement of Control Panel Cover and Gasket	53-15
	(1) Removal	53-15
	(2) Replacement	53-15
	c. Removal and Replacement of Control Panel Assembly Switches and Indicators	53-15
	d. Removal and Replacement of Power Supply	53-15
	(1) Removal	53-15
	(2) Replacement	53-15
	e. Removal and Replacement of Drive Assemblies	53-15
	(1) Removal	53-16
	(2) Replacement	53-16
	f. Removal and Replacement of Electronic Components Assembly	53-16
	(1) Removal	53-16
	(2) Replacement	53-16A
	g. Removal and Replacement of Chains	53-17
	(1) Removal	53-17
	(2) Replacement	53-17
	h. Removal and Replacement of Fan Assemblies	53-18
	(1) Removal	53-18
	(2) Replacement	53-18
	i. Removal and Replacement of Bridge Assembly	53-18
	(1) Removal	53-18
	(2) Replacement	53-19
	j. Removal and Replacement of Cable Take-Up Guide and Retractor Assemblies	53-19
	(1) Removal	53-19
	(2) Replacement	53-20
	k. Removal and Replacement of Write Head Assembly	53-20
	(1) Removal	53-20
	(2) Replacement	53-20
	l. Removal and Replacement of DC Motors	53-22
	(1) Removal	53-22
	(2) Replacement	53-22
	m. Removal and Replacement of Eyepiece Light Assembly	53-22
	(1) Removal	53-22
	(2) Replacement	53-22
	n. Removal and Replacement of Eyepiece Subassembly	53-24
	(1) Removal	53-24
	(2) Replacement	53-24

TABLE OF CONTENTS - Continued

Chapter		Page
	o. Removal and Replacement of Bridge Junction Box	53-24
	(1) Removal	53-24
	(2) Replacement	53-24
	p. Removal and Replacement of Rubber Bumpers	53-24
	q. Removal and Replacement of Chain Tension Compensators	53-24
	(1) Removal	53-24
	(2) Replacement	53-25
	r. Removal and Replacement of Sprocket Wheel	53-25
	(1) Removal	53-25
	(2) Replacement	53-26
	s. Removal and Replacement of Sprocket Assembly	53-26
	(1) Removal	53-26
	(2) Replacement	53-26
	t. Removal and Replacement of Bridge Lockout Assembly	53-26
	(1) Removal	53-26
	(2) Replacement	53-26
	u. Removal and Replacement of Pen Holder	53-26
	(1) Removal	53-26
	(2) Replacement	53-26
	v. Removal and Replacement of Bow Handles	53-27
	(1) Removal	53-27
	(2) Replacement	53-27
	w. Removal and Replacement of Upper Left Handle Assembly	53-27
	(1) Removal	53-27
	(2) Replacement	53-27
53-8.	Removal and Replacement of DCU Components	53-27
	a. Removal and Replacement of Front Panel	53-27
	(1) Removal	53-27
	(2) Replacement	53-28
	b. Removal and Replacement of Electronic Control Amplifiers	53-28
	(1) Removal	53-28
	(2) Replacement	53-28
	c. Removal and Replacement of Miscellaneous Components	53-28
53-9.	Removal and Replacement of Hand Held Controller Components	53-28
	a. Removal and Replacement of Cover and Gasket	53-28
	(1) Removal	53-28
	(2) Replacement	53-28A
	b. Removal and Replacement of Miscellaneous Components	53-28A
53-10.	Alignment	53-28A
	a. Servo Motor Drive Chain Alignment and Tension Adjustment	53-28A
	b. X Potentiometer Alignment	53-30
	c. Y Potentiometer Alignment	53-30
	d. X Trim Potentiometer Adjustment	53-33

TABLE OF CONTENTS - Continued

Chapter			Page
		e. Y Trim Potentiometer Adjustment	53-33
		f. X Limit Switch S1 Adjustment	53-34
		g. X Limit Switch S2 Adjustment	53-34
		h. Y Limit Switch S1 Adjustment	53-34
		i. Y Limit Switch S2 Adjustment	53-35
		j. Potentiometer Sprocket Installation and Chain Tension	53-35
		k. X Axis-Bridge Chain Tension	53-36
		l. Y Axis-Bridge Chain Tension	53-36
54	ELECTRONIC TACTICAL DISPLAY MAINTENANCE		54-1
Section I.	TROUBLESHOOTING		54-1
54-1.	Introduction		54-1
54-2.	Troubleshooting Techniques		54-1
54-3.	Visual Inspection		54-2
54-4.	ETD Tests		54-2
54-5.	ETD Manual Troubleshooting		54-2
Section II.	REPAIR		54-16
54-6.	Introduction		54-16
54-7.	Adjustment After Repair		54-16
54-8.	Removal and Replacement of Control Panel Pushbutton Switches and Controls		54-16
		a. Removal	54-16
		b. Replacement	54-18
54-9.	Removal and Replacement of POWER Pushbutton Switch		54-18
		a. Removal	54-18
		b. Replacement	54-18
54-10.	Removal and Replacement of Bezel Assembly		54-19
		a. Removal	54-19
		b. Replacement	54-19
54-11.	Removal and Replacement of CRT		54-19
		a. Removal	54-19
		b. Replacement	54-20
54-12.	Removal and Replacement of Focus/Astigmatism Amplifier		54-24A
		a. Removal	54-24A
		b. Replacement	54-25
54-13.	Removal and Replacement of Deflection Amplifier Power Supply		54-25
		a. Removal	54-25
		b. Replacement	54-25
54-14.	Removal and Replacement of Deflection Amplifiers		54-26
		a. Removal of Right-Hand Deflection Amplifier	54-26
		b. Replacement of Right-Hand Deflection Amplifier	54-26
		c. Removal of Left-Hand Deflection Amplifier	54-27
		d. Replacement of Left-Hand Deflection Amplifier	54-27

TABLE OF CONTENTS - Continued

Chapter			Page
	54-15.	Removal and Replacement of HVPS	54-28
		a. Removal	54-28
		b. Replacement	54-28
	54-16.	Removal and Replacement of Display Memory	54-29
		a. Removal	54-29
		b. Replacement	54-29
	54-17.	Removal and Replacement of Pen Processor and Bias Assembly	54-29
		a. Removal	54-29
		b. Replacement	54-30
	Section III.	ALIGNMENT	54-31
	54-18.	Introduction	54-31
	54-19.	Focus/Astigmatism Amplifier Adjustment	54-31
	54-20.	Deflection Amplifier Adjustment	54-33
		a. Preliminary	54-33
		b. Centering Adjustment	54-33
		c. Position Adjustment	54-33
		d. Symbol Size Adjustment	54-34
	54-21.	HVPS Adjustment	54-34
	54-22.	Pen Processor and Bias Assembly Adjustment	54-34
	54-23.	Light Pen Adjustment	54-34
	54-24.	Position Digilog Circuit Card A1316 or A1324 Adjustment	54-35
	54-25.	Line Generator Control Circuit Card A1328 Adjustment	54-37
55		POWER CONVERTER GROUP DIRECT SUPPORT MAINTENANCE	55-1
	Section I.	TROUBLESHOOTING	55-1
	55-1.	Introduction	55-1
	55-2.	Troubleshooting Techniques	55-1
	55-3.	Visual Inspection	55-1
	55-4.	PCG FI Tests	55-1
		a. Preliminary Fault Isolation	55-1
		b. Tripped Circuit Breaker(s)	55-2
		c. Surge Arrester Test Failure	55-2
		d. Emergency Power Switching Failure	55-2
		e. Output Power Loss	55-6
	Section II.	REPAIR	55-27
	55-5.	Introduction	55-27
	55-6.	Removal and Replacement of Front Panel Rear Cover	55-27
		a. Removal	55-27
		b. Replacement	55-27
	55-7.	Removal and Replacement of Front Panel Controls and Indicators	55-28
		a. Removal and Replacement of Circuit Breakers CB1 and CB4 thru CB22	55-28

TABLE OF CONTENTS - Continued

Chapter			Page
		b. Removal and Replacement of Circuit Breakers CB2 and CB3	55-28
		c. Removal and Replacement of Indicators DS12 and DS13	55-30
		d. Removal and Replacement of Time Totalizing Meter M1	55-30
		e. Removal and Replacement of Rotary Switch 27	55-31
	55-8.	Removal and Replacement of Front Panel Rear-Mounted Components	55-31
		a. Removal and Replacement of Terminal Board TB1	55-31
		b. Removal and Replacement of Relays K2 and K4	55-32
		c. Removal and Replacement of Bus Bar W1	55-32
		d. Removal and Replacement of Arrester Assembly A11	55-33
		e. Removal and Replacement of Surge Arrester	55-34
		f. Removal and Replacement of Filters FL2, FL3, and FL4	55-34
		g. Removal and Replacement of Relays K3 and K5	55-35
		h. Removal and Replacement of Zener Diode Assemblies VR1, VR2, and VR3	55-36
		i. Removal and Replacement of Filters FL5 thru FL10	55-36
		j. Removal and Replacement of Electronic Component Assembly A10	55-37
		k. Removal and Replacement of Relay K1	55-38
	55-9.	Removal and Replacement of Internal Assemblies	55-38
		a. Removal and Replacement of Diode Assembly A9	55-38
		b. Removal and Replacement of 1N3291 and 1N3291R Diodes	55-40
		c. Removal and Replacement of 1N3190 Diodes	55-42
		d. Removal and Replacement of Capacitor C1	55-43
		e. Removal and Replacement of Component Board Assembly	55-44
		f. Removal and Replacement of Voltage Transient Protector Z1	55-44
		g. Removal and Replacement of Phase Sensing Relay K6	55-45
		h. Removal and Replacement of Relay K7	55-45
		i. Removal and Replacement of Transformer T1	55-46
		j. Removal and Replacement of Diode Board A16	55-48
		k. Removal and Replacement of Diode Board A16 Diodes	55-50
		l. Removal and Replacement of Surge Arrester Circuit Card Assemblies A14 and A15	55-50
56		COMMUNICATIONS TERMINAL BOX DIRECT SUPPORT MAINTENANCE	56-1
	Section I.	TROUBLESHOOTING	56-1
	56-1.	Introduction	56-1
	56-2.	Troubleshooting	56-1

TABLE OF CONTENTS - Continued

Chapter		Page
Section II.	REPAIR	56-2
56-3.	Introduction	56-2
56-4.	Removal and Replacement of Cable Assembly W1	56-2
	a. Removal	56-2
	b. Replacement	56-2
56-5.	Removal and Replacement of Cable Assembly W2	56-2
	a. Removal	56-3
	b. Replacement	56-3
56-6.	Removal and Replacement of EMI Filter Assembly	56-3
	a. Removal	56-3
	b. Replacement	56-3
56-7.	Removal and Replacement of Connector Covers	56-3
	a. Removal	56-4
	b. Replacement	56-4
56-8.	Removal and Replacement of Strap Assembly	56-4
	a. Removal	56-4
	b. Replacement	56-4
56-9.	Removal and Replacement of EMI Compartment Cover Handle	56-4
	a. Removal	56-4
	b. Replacement	56-5
56-10.	Removal and Replacement of Door Closer	56-5
	a. Removal	56-5
	b. Replacement	56-5
56-11.	Removal and Replacement of Stud Assembly	56-5
	a. Removal	56-5
	b. Replacement	56-5
56-12.	Removal and Replacement of Binding Post	56-5
	a. Removal	56-5
	b. Replacement	56-6
56-13	Removal and Replacement of Terminal Stud	56-6
	a. Removal	56-6
	b. Replacement	56-6

TABLE OF CONTENTS - Continued

Chapter			Page
57		COMMUNICATIONS JUNCTION BOX DIRECT SUPPORT MAINTENANCE	57-1
	Section I.	TROUBLESHOOTING	57-1
	57-1.	Introduction	57-1
	57-2.	Troubleshooting	57-1
	Section II.	REPAIR	57-2
	57-3.	Introduction	57-2
	57-4.	Removal and Replacement of Cable Assembly W1	57-2
		a. Removal	57-2
		b. Replacement	57-2
	57-5.	Removal and Replacement of Cable Assembly W2	57-2
		a. Removal	57-2
		b. Replacement	57-3
	57-6.	Removal and Replacement of Branched Wiring Harness Assembly (see fig. D-25)	57-3
		a. Removal	57-3
		b. Replacement	57-3
	57-7.	Removal and Replacement of Branched Wiring Harness Assembly (see fig. D-25)	57-4
		a. Removal	57-4
		b. Replacement	57-4
	57-8.	Removal and Replacement of EMI Filter Assembly	57-4
		a. Removal	57-4
		b. Replacement	57-4
	57-9.	Removal and Replacement of Stud Terminal Assembly E11	57-4
		a. Removal	57-5
		b. Replacement	57-5
	57-10.	Removal and Replacement of Binding Post Assembly	57-5
		a. Removal	57-5
		b. Replacement	57-6
	57-11.	Removal and Replacement of Connector Panel	57-6
		a. Removal	57-6
		b. Replacement	57-6
	57-12.	Repair Verification	57-6
58		MODULE TEST SET DIRECT SUPPORT MAINTENANCE	58-1
	Section I.	TROUBLESHOOTING	58-1
	58-1.	Introduction	58-1
	58-2.	On-Site Troubleshooting Procedures	58-1
		a. MTS Failure During Equipment Troubleshooting	58-1
		b. MTS Failure During Routine Maintenance Check	58-1

TABLE OF CONTENTS - Continued

Chapter			Page
	58-3.	Detailed Troubleshooting Procedures	58-1
		a. Visual Inspection	58-2
		b. MTS Self Test	58-2
		c. Circuit Card Test	58-2
		d. Test Analysis	58-2
	Section II.	REPAIR	58-7
	58-4.	Introduction	58-7
	58-5.	Removal and Replacement of Circuit Cards	58-7
	58-6.	Removal and Replacement of Test Probe Connector	58-7
		a. Removal	58-7
		b. Replacement	58-7
	58-7.	Removal and Replacement of Front Panel	58-7
		a. Preliminary Procedure	58-9
		b. Access to Panel Components	58-9
59		PASSIVE MAINTENANCE DEVICE DIRECT SUPPORT MAINTENANCE	59-1
	Section I.	TROUBLESHOOTING	59-1
	59-1.	Introduction	59-1
	59-2.	On-Site Troubleshooting	59-1
	59-3.	Detailed Troubleshooting Procedures	59-1
		a. Visual Inspection	59-1
		b. PMD Fault Isolation	59-2
		(1) Readily-Apparent Faults	59-2
		(2) Faults Not Readily Apparent	59-2
	59-4.	Access to Internal Components	59-6
	Section II.	REPAIR	59-7
	59-5.	Introduction	59-7
	59-6.	Removal and Replacement of Extender Card Connector	59-7
		a. Removal	59-7
		b. Replacement	59-7
	59-7.	Removal and Replacement of Panel Assembly	59-7
		a. Removal	59-7
		b. Replacement	59-7
	59-8.	Removal and Replacement of Rubber Bumper	59-8
		a. Removal	59-8
		b. Replacement	59-8
	59-9.	Removal and Replacement of Connector J3	59-8
		a. Removal	59-8
		b. Replacement	59-8

TABLE OF CONTENTS - Continued

Chapter		Page
59-10.	Removal and Replacement of Card Guide and Connector J2	59-9
	a. Removal	59-9
	b. Replacement	59-9
59-11.	Removal and Replacement of Test Point Connectors	59-9
	a. Removal	59-9
	b. Replacement	59-9
59-12.	Removal and Replacement of Resistor R1	59-10
	a. Removal	59-10
	b. Replacement	59-10

TABLE OF CONTENTS - Continued

Chapter			Page
60	MISCELLANEOUS DIRECT SUPPORT MAINTENANCE		60-1
Section I.	TROUBLESHOOTING		60-1
60-1.	Introduction		60-1
60-2.	Troubleshooting Techniques		60-1
60-3.	Visual Inspection		60-1
Section II.	REPAIR		60-6
60-4.	Introduction		60-6
60-5.	DivArty Computer Shelter Assembly Repair		60-6
	a.	Removal and Replacement of Air-Conditioner Transport Cover	60-6
		(1) Removal and replacement in stowed position	60-6
		(a) Removal	60-6
		(b) Replacement	60-6
		(2) Removal and replacement in shelter wall opening	60-7
		(a) Removal	60-7
		(b) Replacement	60-7
	b.	Removal and Replacement of Air-Conditioner Assembly	60-7
		(1) Removal and replacement in stowed position	60-7
		(a) Removal	60-8
		(b) Replacement	60-8
		(2) Removal and replacement in shelter wall	60-8
		(a) Removal	60-8
		(b) Replacement	60-9
	c.	Removal and Replacement of Air-Conditioner Assembly Components	60-9
		(1) Removal and replacement of air-conditioner	60-9
		(a) Removal	60-9
		(b) Replacement	60-9
		(2) Removal and replacement of air-conditioner adapter	60-10
		(a) Removal	60-10
		(b) Replacement	60-10
	d.	Removal and Replacement of PEP Components	60-11
		(1) Removal and replacement of wiring harness J4	60-11
		(a) Removal	60-11
		(b) Replacement	60-12
		(2) Removal and replacement of wiring harness J5	60-12
		(a) Removal	60-12
		(b) Replacement	60-13
		(3) Removal and replacement of wiring harness J6	60-13
		(a) Removal	60-13
		(b) Replacement	60-14
		(4) Removal and replacement of wiring harness J7	60-14
		(a) Removal	60-14
		(b) Replacement	60-15

TABLE OF CONTENTS - Continued

Chapter		Page
	(5) Removal and replacement of ground terminal E1	60-16
	(a) Removal	60-16
	(b) Replacement	60-17
	(6) Removal and replacement of terminal board TB1	60-17
	(a) Removal	60-17
	(b) Replacement	60-19
	(7) Removal and replacement of circuit breaker CB1	60-19
	(a) Removal	60-19
	(b) Replacement	60-20
	(8) Removal and replacement of circuit breaker CB2	60-21
	(a) Removal	60-21
	(b) Replacement	60-22
	(9) Removal and replacement of connector J1 thru J4 protective covers	60-22
	(a) Removal	60-22
	(b) Replacement	60-22
	(10) Removal and replacement of connector J7 protective cover	60-22A
	(a) Removal	60-22A
	(b) Replacement	60-22A
	e. Removal and Replacement of Antenna	60-23
	(1) Removal	60-23
	(2) Replacement	60-23
	f. Removal and Replacement of Latch Support Bracket	60-23
	(1) Removal	60-23
	(2) Replacement	60-23
	g. Removal and Replacement of CTB Opening Cover Captive Screw Assembly	60-24
	(1) Removal	60-24
	(2) Replacement	60-24
	h. Removal and Replacement of Shelter Lights Junction Box Assembly	60-25
	(1) Removal	60-25
	(2) Replacement	60-25
	i. Removal and Replacement of LJB Components	60-25
	(1) Removal and replacement of terminal board TB1	60-25
	(a) Removal	60-26
	(b) Replacement	60-26
	(2) Removal and replacement of terminal board TB2	60-26
	(a) Removal	60-26
	(b) Replacement	60-26A
	j. Removal and Replacement of Telephone Junction Box Assembly	60-27
	(1) Removal	60-27
	(2) Replacement	60-27
	k. Removal and Replacement of Telephone Junction Box Assembly Components	60-27
	(1) Removal and replacement of terminal board TB1	60-27
	(a) Removal	60-27
	(b) Replacement	60-28

TABLE OF CONTENTS - Continued

Chapter		Page
	(2) Removal and replacement of wiring harness	60-28
	(a) Removal	60-28
	(b) Replacement	60-28
	(3) Removal and replacement of connector J1	60-28
	(a) Removal	60-28
	(b) Replacement	60-28
	l. Removal and Replacement of CPP	60-28
	(1) Removal	60-29
	(2) Replacement	60-29
	m. Removal and Replacement of CPP Components	60-29
	(1) Removal and replacement of connector assembly	60-29
	(a) Removal	60-29
	(b) Replacement	60-30
	(2) Removal and replacement of connector sealing plug	60-30
	(a) Removal	60-30
	(b) Replacement	60-31
	n. Removal and Replacement of Connector Interface Bracket	60-31
	(1) Removal	60-32
	(2) Replacement	60-32
	o. Removal and Replacement of Connector Interface Bracket Ground Cable	60-33
	(1) Removal	60-33
	(2) Replacement	60-33
	p. Removal and Replacement of Cable Bracket Assembly	60-33
	(1) Removal	60-34
	(2) Replacement	60-34
	q. Removal and Replacement of Swivel Bracket Assembly	60-34
	(1) Removal	60-34
	(2) Replacement	60-34
	r. Removal and Replacement of Storage Bracket Assembly	60-36
	(1) Removal	60-36
	(2) Replacement	60-36
	s. Removal and Replacement of Swivel Chair Seat Belt	60-36
	(1) Removal	60-36
	(2) Replacement	60-36
	t. Removal and Replacement of Blackout Curtain	60-37
	(1) Removal	60-37
	(2) Replacement	60-37
	u. Removal and Replacement of Storage Drawer	60-37
	(1) Removal	60-37
	(2) Replacement	60-38
	v. Removal and Replacement of Telephone Set Mounting Bracket	60-38
	(1) Removal	60-38
	(2) Replacement	60-38

TABLE OF CONTENTS - Continued

Chapter		Page
	w. Removal and Replacement of Auxiliary Lighting Fixture Connector	60-39
	(1) Removal	60-39
	(2) Replacement	60-39
	x. Removal and Replacement of CCU Writing Table	60-39
	(1) Removal	60-39
	(2) Replacement	60-40
	y. Removal and Replacement of Angle Brackets	60-40
	(1) Removal	60-40
	(2) Replacement	60-41
	z. Removal and Replacement of CCU Writing Table Retainer	60-41
	(1) Removal	60-41
	(2) Replacement	60-41
	aa. Removal and Replacement of Buckle Assembly	60-42
	(1) Removal	60-42
	(2) Replacement	60-42
	ab. Removal and Replacement of Rack Support Assembly	60-42
	(1) Removal	60-42
	(2) Replacement	60-42
	ac. Removal and Replacement of Ground Terminal	60-43
	(1) Removal	60-43
	(2) Replacement	60-43
	ad. Removal and Replacement of Cable Support	60-44
	(1) Removal	60-44
	(2) Replacement	60-44
	ae. Removal and Replacement of Loudspeaker LS1	60-45
	(1) Removal	60-45
	(2) Replacement	60-45
60-6.	DivArty Display Shelter Assembly Repair	60-45
	a. Removal and Replacement of Air-Conditioner Transport Cover	60-46
	(1) Removal and replacement in stowed position	60-46
	(a) Removal	60-46
	(b) Replacement	60-46
	(2) Removal and replacement in shelter wall opening	60-46
	(a) Removal	60-46
	(b) Replacement	60-46
	b. Removal and Replacement of Air-Conditioner Assembly	60-47
	(1) Removal and replacement in stowed position	60-47
	(a) Removal	60-47
	(b) Replacement	60-47
	(2) Removal and replacement in shelter wall	60-48
	(a) Removal	60-48
	(b) Replacement	60-48

TABLE OF CONTENTS - Continued

Chapter

Page

c. Removal and Replacement of Air-Conditioner Assembly Components 60-48
(1) Removal and replacement of air-conditioner 60-49
(a) Removal 60-49
(b) Replacement 60-49
(2) Removal and replacement of air-conditioner adapter 60-49
(a) Removal 60-50
(b) Replacement 60-50
d. Removal and Replacement of PEP Components. 60-51
(1) Removal and replacement of wiring harness J4 60-51
(a) Removal 60-51
(b) Replacement 60-52
(2) Removal and replacement of wiring harness J5 60-52
(a) Removal 60-52
(b) Replacement 60-53
(3) Removal and replacement of wiring harness J6 60-53
(a) Removal 60-53
(b) Replacement 60-54
(4) Removal and replacement of wiring harness J7 60-54
(a) Removal 60-54
(b) Replacement 60-55
(5) Removal and replacement of ground terminal E1 . . . 60-56
(a) Removal 60-56
(b) Replacement 60-57
(6) Removal and replacement of terminal board TB1 . . . 60-57
(a) Removal 60-57
(b) Replacement 60-59
(7) Removal and replacement of circuit breaker CB1 . . . 60-59
(a) Removal 60-59
(b) Replacement 60-60
(8) Removal and replacement of circuit breaker CB2 . . . 60-61
(a) Removal 60-61
(b) Replacement 60-62
(9) Removal and replacement of connector J1 thru J4 protective covers 60-62
(a) Removal 60-62
(b) Replacement 60-63
(10) Removal and replacement of connector J7 protective cover. 60-63
(a) Removal. 60-63
(b) Replacement 60-63
e. Removal and Replacement of Latch Support Bracket. 60-63
(1) Removal 60-63
(2) Replacement 60-64
f. Removal and Replacement of CJB Opening Cover Captive Screw Assembly 60-64
(1) Removal 60-64
(2) Replacement 60-64A

TABLE OF CONTENTS - Continued

Chapter | Page

g. Removal and Replacement of Shelter Lights Junction Box Assembly 60-65
(1) Removal 60-65
(2) Replacement 60-65
h. Removal and Replacement of LJB Components 60-66
(1) Removal and replacement of terminal board TB1 . . . 60-66
(a) Removal 60-66
(b) Replacement 60-66
(2) Removal and replacement of terminal board TB2 . . . 60-66
(a) Removal 60-66
(b) Replacement 60-67
i. Removal and Replacement of Telephone Junction Box Assembly 60-67
(1) Removal 60-67
(2) Replacement 60-67
j. Removal and Replacement of Telephone Junction Box Assembly Components 60-67
(1) Removal and replacement of terminal board TB1 . . . 60-67
(a) Removal 60-67
(b) Replacement 60-68
(2) Removal and replacement of wiring harness 60-68
(a) Removal 60-68
(b) Replacement 60-68
(3) Removal and replacement of connector J1. 60-68
(a) Removal 60-68
(b) Replacement 60-69
k. Removal and Replacement of Swivel Bracket Assembly . . 60-69
(1) Removal 60-69
(2) Replacement 60-69
l. Removal and Replacement of Cable Support 60-69
(1) Removal 60-69
(2) Replacement 60-70
m. Removal and Replacement of Cable Strap 60-70
(1) Removal 60-70
(2) Replacement 60-70
n. Removal and Replacement of Swivel Chair Seat Belt 60-72
(1) Removal 60-72
(2) Replacement 60-72
o. Removal and Replacement of Blackout Curtain 60-72
(1) Removal 60-72
(2) Replacement 60-72
p. Removal and Replacement of Map Board 60-73
(1) Removal 60-73
(2) Replacement 60-73

TABLE OF CONTENTS - Continued

Chapter		Page
	q. Removal and Replacement of Telephone Set Mounting Bracket	60-73
	(1) Removal	60-73
	(2) Replacement	60-73
	r. Removal and Replacement of Writing Shelf Support	60-73
	(1) Removal	60-74
	(2) Replacement	60-74
	s. Removal and Replacement of Storage Drawer	60-74
	(1) Removal	60-74
	(2) Replacement	60-74
	t. Removal and Replacement of Ground Terminal	60-75
	(1) Removal	60-75
	(2) Replacement	60-75
60-7.	Bn Computer and Display Shelter Assembly Repair	60-76
	a. Removal and Replacement of Air-Conditioner Transport Cover	60-77
	(1) Removal and replacement in stowed position	60-77
	(a) Removal	60-77
	(b) Replacement	60-77
	(2) Removal and replacement in shelter wall opening	60-77
	(a) Removal	60-77
	(b) Replacement	60-77
	b. Removal and Replacement of Air-Conditioner Assembly	60-78
	(1) Removal and replacement in stowed position	60-78
	(a) Removal	60-78
	(b) Replacement	60-78
	(2) Removal and replacement in shelter wall	60-78
	(a) Removal	60-78
	(b) Replacement	60-79
	c. Removal and Replacement of Air-Conditioner Assembly Components	60-79
	(1) Removal and replacement	60-79
	(a) Removal	60-79
	(b) Replacement	60-80
	(2) Removal and replacement of air-conditioner adapter	60-80
	(a) Removal	60-80
	(b) Replacement	60-81
	d. Removal and Replacement of PEP Components	60-81
	(1) Removal and replacement of wiring harness J4	60-81
	(a) Removal	60-81
	(b) Replacement	60-82
	(2) Removal and replacement of wiring harness J5	60-82
	(a) Removal	60-82
	(b) Replacement	60-83
	(3) Removal and replacement of wiring harness J6	60-83
	(a) Removal	60-84
	(b) Replacement	60-84

TABLE OF CONTENTS - Continued

Chapter		Page
	(4) Removal and replacement of wiring harness J7	60-85
	(a) Removal	60-85
	(b) Replacement	60-86
	(5) Removal and replacement of ground terminal E1	60-87
	(a) Removal	60-87
	(b) Replacement	60-87
	(6) Removal and replacement of terminal board TB1	60-88
	(a) Removal	60-88
	(b) Replacement	60-89
	(7) Removal and replacement of circuit breaker CB1	60-89
	(a) Removal	60-90
	(b) Replacement	60-91
	(8) Removal and replacement of circuit breaker CB2	60-92
	(a) Removal	60-92
	(b) Replacement	60-93
	(9) Removal and replacement of connector J1 thru J4 protective covers	60-93
	(a) Removal	60-93
	(b) Replacement	60-93
	(10) Removal and replacement of connector J7 protective cover	60-94
	(a) Removal	60-94
	(b) Replacement	60-94
e.	Removal and Replacement of Antenna	60-94
	(1) Removal	60-94
	(2) Replacement	60-94
f.	Removal and Replacement of Latch Support Bracket	60-94
	(1) Removal	60-94
	(2) Replacement	60-94A
g.	Removal and Replacement of CTB Opening Cover Captive Screw Assembly	60-95
	(1) Removal	60-95
	(2) Replacement	60-95
h.	Removal and Replacement of Shelter Lights Junction Box Assembly	60-96
	(1) Removal	60-96
	(2) Replacement	60-96
i.	Removal and Replacement of LJB Components	60-96
	(1) Removal and replacement of terminal board TB1	60-96
	(a) Removal	60-97
	(b) Replacement	60-97
	(2) Removal and replacement of terminal board TB2	60-97
	(a) Removal	60-97
	(b) Replacement	60-98
j.	Removal and Replacement of Telephone Junction Box Assembly	60-98
	(1) Removal	60-98
	(2) Replacement	60-98

TABLE OF CONTENTS - Continued

Chapter		Page
k.	Removal and Replacement of Telephone Junction Box Assembly Components	60-98
	(1) Removal and replacement of terminal board TB1	60-98
	(a) Removal	60-98
	(b) Replacement	60-99
	(2) Removal and replacement of wiring harness	60-99
	(a) Removal	60-99
	(b) Replacement	60-99
	(3) Removal and replacement of connector J1	60-99
	(a) Removal	60-99
	(b) Replacement	60-99
l.	Removal and Replacement of CPP	60-99
	(1) Removal	60-100
	(2) Replacement	60-100
m.	Removal and Replacement of CPP Components	60-100
	(1) Removal and replacement of connector assembly	60-100
	(a) Removal	60-100
	(b) Replacement	60-101
	(2) Removal and replacement of connector sealing plug	60-101
	(a) Removal	60-101
	(b) Replacement	60-102
n.	Removal and Replacement of Connector Interface Bracket	60-102
	(1) Removal	60-103
	(2) Replacement	60-103
o.	Removal and Replacement of Connector Interface Bracket Ground Cable	60-104
	(1) Removal	60-104
	(2) Replacement	60-104
p.	Removal and Replacement of Cable Bracket Assembly	60-104
	(1) Removal	60-105
	(2) Replacement	60-105
q.	Removal and Replacement of Swivel Bracket Assembly	60-105
	(1) Removal	60-105
	(2) Replacement	60-105
r.	Removal and Replacement of Storage Bracket Assembly	60-106
	(1) Removal	60-106
	(2) Replacement	60-106
s.	Removal and Replacement of Roadside Interior Storage Drawer	60-106
	(1) Removal	60-106
	(2) Replacement	60-107
t.	Removal and Replacement of Swivel Chair Seat Belt	60-107
	(1) Removal	60-107
	(2) Replacement	60-107

TABLE OF CONTENTS - Continued

Chapter		Page
u.	Removal and Replacement of Rack-Mounted Buckle Assembly	60-108
	(1) Removal	60-108
	(2) Replacement	60-108
v.	Removal and Replacement of Tiedown Strap	60-108
	(1) Removal	60-108
	(2) Replacement	60-108
w.	Removal and Replacement of Blackout Curtain	60-109
	(1) Removal	60-109
	(2) Replacement	60-109
x.	Removal and Replacement of Curbside Interior Storage Drawer	60-109
	(1) Removal	60-109
	(2) Replacement	60-109
y.	Removal and Replacement of Auxiliary Lighting Fixture Connector	60-110
	(1) Removal	60-110
	(2) Replacement	60-110
z.	Removal and Replacement of CCU Writing Table	60-110
	(1) Removal	60-111
	(2) Replacement	60-111
aa.	Removal and Replacement of Angle Bracket	60-111
	(1) Removal	60-112
	(2) Replacement	60-112
ab.	Removal and Replacement of CCU Writing Table Retainer	60-112
	(1) Removal	60-112
	(2) Replacement	60-112
ac.	Removal and Replacement of Buckle Assembly	60-113
	(1) Removal	60-113
	(2) Replacement	60-113
ad.	Removal and Replacement of Rack Support Assembly	60-113
	(1) Removal	60-113
	(2) Replacement	60-113
ae.	Removal and Replacement of Ground Terminal	60-114
	(1) Removal	60-114
	(2) Replacement	60-114
af.	Removal and Replacement of Transmitting Set Mounting Plate	60-115
	(1) Removal	60-115
	(2) Replacement	60-115
ag.	Removal and Replacement of Headset Container	60-116
	(1) Removal	60-116
	(2) Replacement	60-116
ah.	Removal and Replacement of FEXT Bracket	60-117
	(1) Removal	60-117
	(2) Replacement	60-117

TABLE OF CONTENTS - Continued

Chapter			Page
61		REMOTE EQUIPMENT DIRECT SUPPORT MAINTENANCE	61-1
	Section I.	Troubleshooting	61-1
	61-1.	Introduction	61-1
	61-2.	Troubleshooting	61-1
	Section II.	REPAIR	61-2
	61-3.	Introduction	61-2
	61-4.	Removal and Replacement of Pressure Relief Valve	61-2
	61-5.	Removal and Replacement of ELP Mounting Base	61-2
		a. Removal	61-2
		b. Replacement	61-2
	61-6.	Repair Verification	61-2

APPENDIX D

Table of Contents

		Page	Illus Figure/ Table
Section	I. Introduction	D-1	
	D-1 Scope	D-1	
	D-2 General	D-1	
	a. Sections II, IV, VI and VIII - Repair Parts List	D-1	
	b. Sections III, V, VII and IX - Special Tools Lists	D-1	
	c. Section X - National Stock Number and Part Number Index	D-1	
	d. Section XI - MIL-STD and Manufacturers Part Number Index	D-1	
	D-3 Explanation of Columns	D-1	
	a. ILLUSTRATION	D-1	
	(1) FIG. NO.	D-1	
	(2) ITEM NO.	D-1	
	b. SMR CODE	D-1	
	(1) Source code	D-1	
	(2) Maintenance code	D-2	
	(3) Recoverability code	D-3	
	c. NATIONAL STOCK NUMBER	D-4	
	d. PART NUMBER	D-4	
	e. FSCM	D-4	
	f. DESCRIPTION	D-4	
	g. UNIT OF MEAS	D-4	
	h. QTY INC IN UNIT	D-4	
	D-4 Specific Information	D-5	
	D-5 How to Locate Repair Parts	D-5	
	a. Part Number or NSN Unknown	D-5	
	b. Part Number or NSN Known	D-5	
Section	II. Fire Direction Center, Artillery OA-8390/GSG-10(V) Repair Parts List	D-6	
Group	00 Fire Direction Center, Artillery OA-8390/GSG-10(V)	D-7	D-1
	01 Interconnection Kit, Artillery MK-1131/GSG-10(V) and Interconnection Kit, Artillery MK-1786/GSG-10(V)	D-9	D-2
	02 Fire Direction Center, Artillery, Processing OL-48/GSG-10(V)	D-12	D-3
	0201 Shelter, Electrical Equipment S-490/GSG-10(V) (See Group 02)		
	0202 Air Conditioner/Heater (See TM 5-4120-243-34P for parts)		
	0203 Telephone Set TA-312/PT (See TM 11-5805-201-12 for parts)		

Table of Contents - Continued

		Page	Illus Figure/ Table
0204	Radio Set AN/VRC-46 (See TM 11-5820-401-12 for parts)		
0205	Electronic Tactical Key Generator KG-30 (See TM KAM-237/TSEC for parts)		
0206	Panel Assembly, Power	D-39	D-4
0207	Junction Box	D-41	D-5
0208	Terminal Box, Telephone	D-43	D-6
0209	Interconnection Kit, Artillery, Processing MK-1190/GSG-10(V)	D-45	D-7
0210	Headset H-144/U (See TM 11-5965-206-15P for parts)		
0211	Terminal Box J-3320/GSG-10(V)	D-52	D-8
0212	Test Set, Module AN/GSM-208	D-57	D-9
021201	Case Assembly 587403-102	D-63	D-10
021202	Probe assembly (See Group 0212)		
021203	Cable assembly (No parts authorized)		
021204	Circuit cards, plug-in (No parts authorized)		
021205	Power supply (No parts authorized)		
021206	Panel assembly, front (See Group 0212)		
021207	Card racks (See Group 0212)		
021208	Passive Maintenance Group	D-64A	D-10A
0213	Computer, Digital AN/GYK-12(V)2 (See Group 02)		
021301	Central Processing Unit MX-8950/GYK	D-65	D-11
02130101	Case Assembly 587400-102	D-73	D-12
02130102	Circuit cards, plug-in (No parts authorized)		
02130103	Panel assembly, front (See Group 021301)		
02130104	Card cage assemblies (No parts authorized)		

Table of Contents - Continued

	Page	Illus Figure/ Table
02130105 Frame assembly (No parts authorized)		
021302 Input/Output Unit MX-8951/GYK	D-75	D-13
02130201 Case assembly (See Group 02130101)		
02130202 Circuit cards, plug-in (No parts authorized)		
02130203 Power supply (No parts authorized)		
02130204 Card rack assemblies (No parts authorized)		
02130205 Panel assembly (See Group 021302)		
02130206 Frame assembly (No parts authorized)		
021303 Memory Unit, Mass Core MU-619/GYK	D-83	D-14
02130301 Power supply (No parts authorized)		
02130302 Core stack assembly (No parts authorized)		
02130303 Circuit cards, plug-in (No parts authorized)		
02130304 Card cage assembly (No parts authorized)		
02130305 Panel assembly, front (See Group 021303)		
02130306 Frame assembly (No parts authorized)		
02130307 Case assembly (See Group 02130101)		
0214 Control, Tape Transport Cartridge C-8756(V)2/GYK	D-89	D-15
0214 Control, Magnetic Tape Unit C-10679(V)2/GYK12(V)	D-90A	D-15A
021401 Case assembly (See Group 0214)		
021402 Auxiliary Removable Media Memory	D-91	D-16
02140201 Circuit cards, plug-in (No parts authorized)		
02140202 Converter, dc/dc (No parts authorized)		
02140203 Panel assembly (See Group 021402)		

Table of Contents - Continued

		Page	Illus Figure/ Table
021403	Magnetic Tape Unit	D-98	D-16A
02140301	Circuit cards, plug-in (No parts authorized)		
02140302	Converter, dc/dc (No parts authorized)		
02140303	Magnetic Tape Transport (See Group 021403)		
02140304	Magnetic Tape Cartridge (See Group 021403)		
0215	Tape Transport Cartridge MX-8952/GYK (No parts authorized)		
0216	Converter Group, Power OU-41/GSG-10(V)	D-98F	D-17

Table of Contents - Continued

		Page	Illus Figure/ Table
021601	Power supplies (No parts authorized)		
021602	Panel assembly (See Group 0216)		
021603	Case assembly (See Group 0216)		
021604	Electronic Component Assemblies 590111-102 and 590666-102	D-108	D-18
0217	Converter, Data CV-2863(V)2/G	D-111	D-19
0217	Converter, Data CV-2863(V)1/G	D-112A	D-19A
021701	Case assembly (See Group 0217)		
021702	Digital Data Terminal	D-113	D-20
02170201	Converter, dc/dc (No parts authorized)		
02170202	Circuit cards, plug-in (No parts authorized)		
02170203	Transformer assembly (No parts authorized)		
02170204	Fault isolation assembly (See Group 021702)		
02170205	Panel assembly, front (See Group 021702)		
02170206	Card rack assemblies (No part authorized)		
0218	Control, Communications C-9901/G	D-119	D-21
021801	Case Assembly 587402-104	D-127	D-22
021802	Circuit cards, plug-in (No parts authorized)		
021803	Power supply (No parts authorized)		
021804	Card rack assemblies (No parts authorized)		
021805	Front panel assembly (See Group 0218)		
021806	Keyboard assembly (No parts authorized)		
021807	LED assembly (No parts authorized)		
0219	Cable set, fixed	D-128A	D-22A

Table of Contents - Continued

		Page	Illus Figure/ Table
03	Fire Direction Center, Artillery, Display OK-144/GSG-10(V)	D-129	D-23
0301	Shelter, Electrical Equipment S-492/GSG-10(V) (See Group 03)		
0302	Air conditioner/heater (See TM 5-4120-243-14 for parts)		
0303	Telephone Set TA-312/PT (See TM 11-5805-201-12 for parts)		
0304	Interconnection Kit, Artillery, Display MK-1189/GSG-10(V)	D-146	D-24
0305	Panel assembly, power (See Group 0206)		
0306	Junction box (See Group 0207)		
0307	Terminal box, telephone (See Group 0208)		
0308	Terminal Box J-3355/GSG-10(V)	D-149	D-25
0309	Display, Tactical Electronic AN/GSQ-121(V)	D-155	D-26
030901	Panel assembly, control (See Group 0309)		
030902	Deflection amplifier (No parts authorized)		
030903	Power supply, deflection amplifier (No parts authorized)		
030904	Power supply, high voltage (No parts authorized)		
030905	Converters, dc/dc (No parts authorized)		
030906	Pen processor assembly (No parts authorized)		
030907	Focus-astig amplifier (No parts authorized)		
030908	Memory assembly (No parts authorized)		
030909	Case assembly (See Group 0309)		
030910	Circuit cards, plug-in (No parts authorized)		
030911	Light pen assembly (No parts authorized)		

Table of Contents - Continued

	Page	Illus Figure/ Table
0310 Display Unit, Digital Plotting PT-493/G	D-163	D-27
031001 Hand Control Assembly	D-167	D-28
031002 Recorder, Plotting Display RO-427/G	D-169	D-29
03100201 Spline and bracket assembly (No parts authorized)		
03100202 Panel Assembly, Control	D-180	D-30
03100203 Bridge and write head assemblies (See Group 031002)		
03100204 Drive assemblies, X and Y (No parts authorized)		
03100205 Power supply (No parts authorized)		
03100206 Electronics assembly (No parts authorized)		
03100207 Compensator, Chain Tension	D-183	D-31
03100208 Lamp assembly (See Group 031002)		
03100209 Case Assembly 587407-100	D-185	D-32
031003 Control, Plotting Display C-8819/G	D-187	D-33
03100301 Power supplies, ac/dc (No parts authorized)		
03100302 Circuit cards, plug-in (No parts authorized)		
03100303 Amplifier, electronic control (No parts authorized)		
03100304 Rack, electrical equipment (No parts authorized)		
03100305 Case Assembly 587402-100	D-194	D-34
0311 Line Printer, Electronic RO-344/GSG-10(V)	D-196	D-35
031101 Printer assembly (See Group 0311)		
03110101 Cable assemblies (No parts authorized)		

Table of Contents - Continued

	Page	Illus Figure/ Table
03110102 Housing assembly (No parts authorized)		
03110103 Paper tray and door assembly (See Group 0311)		
0311010301 Paper transport assembly (See Group 0311)		
0311010302 Access door and control panel assembly (See Group 0311)		
03110103021 Control Panel Assembly	D-203	D-36
03110103022 Cable assembly (No parts authorized)		
0311010303 Wire wrap panel assembly (No parts authorized)		
0311010304 Cable assemblies (No parts authorized)		
03110104 Circuit cards, plug-in (No parts authorized)		
03110105 Converter, dc/dc (No parts authorized)		
031102 Case assembly (See Group 0311)		
0312 Console, Artillery Control OJ-70/GSG-10(V)	D-205	D-37
031201 Case Assembly 587401-100	D-212	D-38
031202 Keyboard, Editor	D-214	D-39
03120201 Chassis assembly (No parts authorized)		
0312020101 Circuit cards, plug-in (No parts authorized)		
031203 Switch panel assembly (See Group 0312)		
03120301 Circuit cards, plug-in (No parts authorized)		
03120302 Converter, dc/dc (No parts authorized)		
03120303 Panel assembly, front (See Group 0312)		
03120304 Card rack assembly (No parts authorized)		
031204 Display Editor	D-220	D-40
03120401 Power supply, high voltage (No parts authorized)		

Table of Contents - Continued

			Page	Illus Figure/ Table
	03120402	Converter, dc/dc (No parts authorized)		
	03120403	Circuit cards, plug-in (No parts authorized)		
	03120404	Deflection amplifier (No parts authorized)		
	03120405	Cable assembly (No parts authorized)		
	03120406	Display editor subassembly (See Group 031204)		
	03120407	Card rack assemblies (No parts authorized)		
	0313	Converter Group, Power OU-41/GSG-10(V) (See Group 0216)		
	0314	Monitor, Remote Communications MX-9842/G	D-226	D-41
	031401	Panel assembly, front (See Group 0314)		
	03140101	Circuit card, plug-in (No parts authorized)		
	031402	Case assembly (See Group 0314)		
	0315	Headset H-144/U (See TM 11-5965-206-15P for parts)		
	0316	Cable set, fixed (See Group 0219)		
Section	III.	Fire Direction Center, Artillery, OA-8390/GSG-10(V) Special Tools List	D-229	
Section	IV.	Fire Direction Center, Artillery, Processing and Display OA-8389/GSG-10(V) Repair Parts List	D-230	
Group	00	Fire Direction Center, Artillery, Processing and Display OA-8389/GSG-10(V)	D-231	D-42
	01	Shelter, Electrical Equipment S-491/GSG-10(V) (See Group 00)		
	02	Air conditioner/heater (See TM 5-4120-243-14 for parts)		
	03	Telephone Set TA-312/PT (See TM 11-5805-201-12 for parts)		
	04	Radio Set AN/VRC-46 (See TM 11-5820-401-12 for parts)		
	05	Electronic Tactical Key Generator (See TM KAM-237/TSEC for parts)		

Table of Contents - Continued

	Page	Illus Figure/ Table
06 Panel assembly, power (See Section II, Group 0206)		
07 Junction box (See Section II, Group 0207)		
08 Headset H-144/U (See TM 11-5965-206-15P for parts)		
09 Terminal Box J-3321/GSG-10(V)	D-255	D-43
10 Terminal box, telephone (See Section II, Group 0208)		
11 Interconnection Kit, Artillery, Processing and Display MK-1130/GSG-10(V) and Interconnection Kit, Artillery, Processing and Display MK-1785/GSG-10(V)	D-260	D-44
12 Test Set, Module AN/GSM-208 (See Section II, Group 0212)		
13 Computer, Digital AN/GYK-12(V)1 (See Group 00)		
1301 Central Processing Unit MX-8950/GYK (See Section II, Group 021301)		
1302 Input/Output Unit MX-8951/GYK (See Section II, Group 021302)		
1303 Memory Unit, Mass Core MU-619/GYK (See Section II, Group 021303)		
14 Control, Tape Transport Cartridge C-8756(V)1/GYK (See Section II, Group 0214 for subgroups)	D-268A	D-44A
14 Control, Magnetic Tape Unit C-10679(V)1/GYK12(V) (See Section II, Group 0214 for subgroups)	D-268C	D-44B
15 Tape Transport Cartridge MX-8952/GYK (No parts authorized)		
16 Converter Group, Power OU-41/GSG-10(V) (See Section II, Group 0216)		
17 Converter, Data CV-2863(V)2/G (See Section II, Group 0217)		
18 Display Unit, Digital Plotting PT-493/G (See Section II, Group 0310)		
19 Line Printer, Electronic RO-344/GSG-10(V) (See Section II, Group 0311)		
20 Console, Artillery Control OJ-70/GSG-10(V) (See Section II, Group 0312)		

Table of Contents - Continued

			Page	Illus Figure/ Table
	21	Control, Communications C-9901/G (See Section II, Group 0218)		
	22	Monitor, Remote Communication MX-9842/G (See Section II, Group 0314)		
	23	Cable set, fixed (See Section II, Group 0219)		
Section	V.	Fire Direction Center, Artillery, Processing and Display OA-8389/GSG-10(V) Special Tools List	D-269	
Section	VI.	Message Entry Device, Variable Format AN/GSC-21 Repair Parts List	D-270	
Group	00	Message Entry Device, Variable Format AN/GSC-21	D-271	D-45
	01	Control, Message Entry C-10097/GSC-21 (See Group 00)		
		0101 Remote Data Terminal	D-274	D-46
		010101 Panel assembly (See Group 0101)		
		010102 Circuit cards, plug-in (No parts authorized)		
		010103 Card racks (No parts authorized)		
		010104 Converter, dc/dc (No parts authorized)		
		010105 Electronic components assembly (No parts authorized)		
		0102 Display editor (See Section II, Group 031204)		
		0103 Keyboard editor (See Section II, Group 031202)		
		0104 Case Assembly 587402-106	D-282	D-47
	02	Line Printer, Electronic RO-344/GSG-10(V) (See Section II, Group 0311)		
	03	Interconnection Kit, Message Entry Device MK-1783/GSC-21	D-284	D-48
Section	VII.	Message Entry Device, Variable Format AN/GSC-21 Special Tools List	D-286	
Section	VIII.	Data Display, Artillery, Battery AN/GSQ-122 Repair Parts List	D-287	
Group	00	Data Display, Artillery, Battery AN/GSQ-122	D-288	D-49

Table of Contents - Continued

		Page	Illus Figure/ Table
01	Control, Data Display C-10096/GSQ-122 (See Group 00)		
0101	Remote data terminal (See Section VI, Group 0101)		
0102	Case Assembly 587402-105	D-291	D-50
02	Line Printer, Electronic RO-344/GSG-10(V) (See Section II, Group 0311)		
03	Interconnection Kit, Data Display MK-1784/GSQ-122	D-293	D-51
Section IX.	Data Display, Artillery, Battery AN/GSQ-122 Special Tools List	D-295	
Section X.	National Stock Number and Part Number Index	D-296	
	National Stock Number Index	D-297	D-52
	Part Number Index	D-311	D-53
Section XI.	MIL-STD and Manufacturers Part Index	D-338	
	MIL-STD-to-Litton Data Systems Part Number Index	D-339	D-54
	Manufacturers-to-Litton Data Systems Part Number Index	D-350	D-55

LIST OF ILLUSTRATIONS

VOLUME 1

Figure	Title	Page
2-1.	DivArty FDC Overall Block Diagram	2-3
2-2.	Bn FDC Overall Block Diagram	2-5
2-3.	VFMED Overall Block Diagram	2-7
2-4.	BDU Overall Block Diagram	2-8
3-1.	PCG Cover Storage Diagram	3-5
3-2.	DTU Cover Storage Diagram	3-6
3-3.	ACC Cover Storage Diagram	3-7
3-4.	CCU Cover Storage Diagram	3-8
3-5.	ETD Cover Storage Diagram	3-9
3-6.	MTS Controls and Indicators	3-15
3-7.	MTS Connectors and Terminal Strips	3-17
3-8.	Bn Computer and Display Group Mission Essential Parts Storage	3-22
3-9.	DivArty Computer Group Mission Essential Parts Storage	3-23
3-10.	DivArty Display Group Mission Essential Parts Storage	3-24
3-11.	ELP Interior Access Hardware	3-40
3-12.	Maintenance Task Flow	3-42
3-13.	Card Slot Identification	3-48
3-14.	Digital and Analog Circuits Cards	3-49
3-15.	Typical MTS Connection Diagram	3-57
3-16.	Major Assembly Sliding Mounts	3-63
3-17.	Circuit Card Assemblies and Modules Typical Installation Details	3-66
3-18.	Indicator Lens and Boot Typical Installation Details	3-72
4-1.	Computer Major Assemblies	4-7
4-2.	MCMU Power Supply Removal and Replacement	4-9
8-1.	Display Panel Readout During Lamp Test	8-2
10-1.	SPA Visual Troubleshooting	10-3
14-1.	DPM Fault Isolation Test Instructions	14-2
14-2.	DPM Test Pattern Display	14-3
14-3.	DPU Eyepiece Light Assembly	14-7
15-1.	ETD Service Access Position	15-2
15-2.	Right Card Bay	15-4
15-3.	ETD Air Filters	15-12
19-1.	MTS Major Assemblies	19-5
21-1.	Telephone Set TA-312/PT Installed in Mounting Bracket	21-4
22-1.	Samples of VFMED Self Test and Fault Indication Test Messages	22-5
22-2.	Samples of BDU Self Test and Fault Indication Test Messages	22-6
22-3.	Text of VFMED/BDU Remote Loop Test Messages	22-14
22-4.	VFMED Test Messages	22-16
22-5.	MEG Cover Storage	22-18
FO-1.	DivArty Computer Group and Display Group Interconnect Diagram	
FO-2.	DivArty Computer Group Interconnect Diagram	
FO-3.	DivArty Display Group Interconnect Diagram	
FO-4.	Bn Computer 2nd Display Group Interconnect Diagram	
FO-5.	VFMED Interconnect Diagram	
FO-6.	BDU Interconnect Diagram	

LIST OF ILLUSTRATIONS

VOLUME 2

Figure	Title	Page
24-1.	Computer Block Diagram	24-2
24-2.	Computer Data Word Formats	24-3
24-3.	Computer Instruction Word Format	24-5
24-4.	Base Memory Map	24-12
24-5.	CPU Simplified Block Diagram	24-14
24-6.	Memory Interface Controller Block Diagram	24-17
24-7.	Forming 25-Bit Word Address	24-20
24-8.	Instruction Controller Block Diagram	24-24
24-9.	Micro-Operation Code Register Assignments	24-29
24-10.	CPU Process Registers Block Diagram	24-31
24-11.	Arithmetic Section Block Diagram	24-33
24-12.	Special Registers Stored in Base Memory Block Diagram	24-36
24-13.	Program Level Controller Block Diagram	24-48
24-14.	Diagnose Section Block Diagram	24-52
24-15.	IOU Simplified Block Diagram	24-57
24-16.	IOU to CPU/CTS Interface	24-59
24-17.	IOU to Peripheral Device Interface	24-62
24-18.	IOU to IOX DC I/O Interface	24-64
24-19.	Address and Control Word Format	24-83
24-20.	MBA Word Format	24-84
24-21.	MCMU to CPU/IOU Interface	24-86
24-22	MCMU Registers Block Diagram	24-89
25-1.	Tape Layout	25-2
25A-1.	Magnetic Tape Format	25A-2
25A-2.	Tape Track Allocation	25A-3
25A-3.	Magnetic Tape Cartridge Tape Mechanism	25A-4
26-1.	DDT Block Diagram	26-2
27-1.	RDT Functional Interface Block Diagram	27-2
28-1.	Functional Interface Relationship Block Diagram	28-2
28-2.	CCU Functional Block Diagram	28-3
29-1.	RCMU Functional Block Diagram	29-2
29-2.	RCMU Detailed Block Diagram	29-3
30-1.	SPA Simplified Block Diagram	30-2
30-2.	SA Channel ITR Word Format	30-4
30-3.	C/E Channel ITR Word Format	30-5
30-4.	RD Channel ITR Word Format	30-6
30-5.	SA Channel OFR Word Format	30-8
30-6.	Device Command Byte Formats	30-9
30-7.	C/E and RD Channel Interrupt Byte Formats	30-10
31-1.	DE Overall Block Diagram	31-4
31-2.	Character Position and Dot Pattern	31-6
32-1.	Alphanumeric Editor Keyboard Simplified Block Diagram	32-2
32-2.	Keyboard Matrix Simplified Schematic Diagram	32-3
33-1.	Simplified ELP Printer Mechanism	33-2
34-1.	ASCII Character Library	34-3
34-2.	Symbol Library	34-4
34-3.	Special Symbols	34-5
34-4.	DPM Functional Block Diagram	34-7

LIST OF ILLUSTRATIONS - Continued

Figure	Title	Page
34-5.	Computer-to-DPM OFR Word Format	34-12
34-6.	Computer-to-DPM Control Word Format	34-13
34-7.	Computer-to-DPM Position/Line Terminus Word Format	34-14
34-8.	Computer-to-DPM Character Word Format	34-15
34-9.	Character Field Matrix	34-16
34-10.	DPM-to-Computer (ITR) Switch Code Format (ITR Format Number 1)	34-17
34-11.	DPM-to-Computer (ITR) Manual Entry Word Format (ITR Format Number 2)	34-19
34-12.	DPM-to-Computer (ITR) Maintenance and Diagnostic Word ID Format (ITR Format Number 3)	34-20
34-13.	Electronic Drive System Block Diagram	34-27
34-14.	Digital-to-Analog Converter Block Diagram	34-28
34-15.	Servo Amplifier and Null Detector System Block Diagram	34-30
34-16.	Servo Drive Assembly and Follower Potentiometer Block Diagram	34-33
34-17.	Marker Solenoid Driver and Solenoid Simplified Schematic Diagram	34-34
34-18.	Stepper System Block Diagram	34-36
34-19.	DC-to-AC Inverter Block Diagram	34-38
35-1.	ETD Typical Display	35-2
35-2.	ETD-to-Computer Communication Exchange	35-4
35-3.	Computer-to-ETD OFR Word Format	35-6
35-4.	Computer-to-ETD Control Word Format	35-7
35-5.	Computer-to-ETD Position Word Format	35-8
35-6.	Computer-to-ETD Character Word Format	35-9
35-7.	Alphanumeric Character Set	35-10
35-8.	Symbol Library	35-11
35-9.	Special Symbols	35-12
35-10.	Character Field Matrix	35-13
35-11.	Interface Data Timing Diagram	35-15
35-12.	Display Site/Word Group Organization	35-16
35-13.	ETD-to-Computer ITR1 Switch Code Format	35-17
35-14.	ETD-to-Computer ITR3 Diagnostic Code Format	35-18
35-15.	I/O Register Data Flow	35-31
35-16.	Display Controller Detailed Block Diagram	35-34
35-17.	Symbol/Character Generator Detailed Block Diagram	35-38
35-18.	Line and Position Circuits Detailed Block Diagram	35-41
35-19.	X- and Y-Stroke Integrators Detailed Block Diagram	35-42
35-20.	Video Compensation and Amplifier Circuits Detailed Block Diagram	35-44
35-21.	CRT Display Circuits and Controls Detailed Block Diagram	35-45
36-1.	PCG Block Diagram	36-2
37-1.	CTB Functional Block Diagram	37-2
38-1.	CJB Functional Block Diagram	38-2
39-1.	MTS Test Sequencing	39-2
39-2.	MTS Block Diagram	39-8
39-3.	MTS Basic Clock Timing Diagram	39-9
40-1.	PMD Functional Block Diagram	40-2
FO-1.	CPU Functional Block Diagram	
FO-2.	IOU Functional Block Diagram	
FO-3.	ARMM Functional Block Diagram	

LIST OF ILLUSTRATIONS - Continued

Figure	Title	Page
FO-3A.	MTU Functional Block Diagram	
FO-3B.	MTU Control Block Diagram	
FO-4.	RDT Detailed Block Diagram	
FO-5.	SPA Detailed Block Diagram	
FO-6.	DE Detailed Block Diagram	
FO-7.	ELP Functional Block Diagram	
FO-8.	DCU Block Diagram	
FO-9.	ETD Block Diagram	
FO-10.	Display Programmer Detailed Block Diagram	
FO-11.	ETD Power Distribution	
FO-12.	PCG Schematic Diagram	
FO-13.	CTB Wiring Diagram	
FO-14.	CJB Wiring Diagram	

LIST OF ILLUSTRATIONS

VOLUME 3

Figure	Title	Page
42-1.	PMD Interface With Unit Under Test and Digital Logic Card	42-10
42-1A.	PMD Controls and Indicators	42-10A
42-1B.	Maintenance Task Flow	42-13
42-2.	Typical Instrallation Details for Safety Relief Valve	42-16
42-3.	Typical Installation Details for Pushbutton Switch and Related Hardware	42-17
42-4.	Typical Installation Details for Lampholder and Attaching Parts	42-18
42-5.	Typical Installation Details for Toggle Switch	42-20
42-6.	Typical Installation Details for Stepping Switch	42-21
42-7.	Typical Installation Details for Rotary Switch	42-22
42-8.	Typical Installation Details for Potentiometer	42-24
42-9.	Typical Installation Details for Time Meter	42-25
42-10.	Temporary Repair of Broken Wire-Wrapped Wires	42-27
42-11.	Connector List Example	42-29
42-12.	Wiring Terminations	42-32
42-13.	String and Double Entry List Examples	42-34
42-14.	Logic List Example	42-38
43-1.	MCMU Core Stack Assembly Removal and Replacement	43-5
44A-1.	MTT Test Point Location	44A-6
44A-2.	MTT Power Supply and Power Filter Wiring Diagram	44A-7
44A-3.	MTT Adjustment Locations	44A-13
45-1.	Fault Isolation Assembly Removal	45-3
48-1.	Installation of Lampholder	48-6
51-1.	Wiring Harness Wiring Diagram	51-4
52-1.	Belt Tension Adjustment for Stepper Motor	52-15
52-2.	Indicator Cap Alignment Diagram	52-17
53-1.	DPM System Interconnection	53-4
53-2.	Cable 1 W1 Wiring Diagram	53-5
53-3.	Cable 1 W2 Wiring Diagram	53-6
53-4.	Cable W201 Wiring Diagram	53-7
53-5.	Cable W210 Wiring Diagram	53-8
53-6.	Cable W209 Wiring Diagram	53-9
53-7.	Bridge Junction Box 1A6 Wiring Diagram	53-10
53-8.	Instrument Light Cable 1 W3, Stepper Motor Cable 1 W4, Stepper Motor Cable 1 W5, and Solenoid Cable 1 W7 Wiring Diagrams	53-11
53-9.	Cable W8 Wiring Diagram	53-12
53-10.	Hand-Held Controller Schematic Diagram	53-13
53-11.	Write Head Cable Routing	53-21
53-12.	DPU Eyepiece Light Assembly	53-23
53-13.	Y Drive Chain Alignment and Tension Adjustment	53-29
53-14.	X and Y Bridge Alignment Diagram	53-31
53-15.	Potentiometer Alignment Diagram	53-32
53-16.	X Axis Bridge Chain Tension	53-37
54-1.	ETD Test Pattern	54-3
54-2.	ETD Test Points	54-14
54-3.	ETD Waveforms	54-15
54-4.	ETD Crt Removal	54-22
54-5.	ETD Adjustment Locations	54-32
54-6.	Light Pen Assembly	54-36
58-1.	MTS Connectors and Terminal Strips	58-4

LIST OF ILLUSTRATIONS - Continued

Figure	Title	Page
58-2.	Test Cables W117 and W268 Wiring Diagram	58-5
58-2A.	MTS-PMD Test Setup	58-6A
58-3.	Test Probe Repair	58-8
60-1.	Installation of Tiedown Straps	60-35
60-2.	Installation of Cable Strap	60-71
FO-1.	DPM Interconnecting Cable Diagram	
FO-2.	DPU Control Panel Schematic Diagram	
FO-3.	DPU Mechanical Schematic Diagram	
FO-4.	DPU Simplified Functional Diagram	
FO-5.	Power Distribution for Shelter Lights, AC/DC Convenience Outlets, and Emergency Power	

LIST OF TABLES

VOLUME 1

Table	Title	Page
1-1.	Equipment Nomenclature, Common Names, and Abbreviations	1-2
3-1.	Tools Required for Maintenance	3-12
3-2.	MTS Controls and Indicators	3-16
3-3.	MTS Connectors and Terminal Strips	3-18
3-4.	Materials Supplied	3-19
3-5.	Bn Indicator Lamp Matrix	3-20
3-6.	DivArty Indicator Lamp Matrix	3-21
3-7.	Mission Essential Parts	3-25
3-7A.	Mission Essential Parts (Systems with MTUs)	3-30
3-8.	Equipment Finishes	3-32
3-9.	Monthly Organizational Preventive Maintenance Checks and Service	3-35
3-10.	Quarterly Organizational Preventive Maintenance Checks and Service	3-36
3-11.	PCG Switches Versus Major Assembly	3-37
3-12.	IOU TEST Switch Settings for Fault Detection and Isolation	3-52
3-13.	Circuit Cards Tested by Module Test Set	3-54
3-14.	Identification of MTS Test Connectors on Units and Major Assemblies	3-55
4-1.	Computer Visual Troubleshooting	4-2
5-1.	ARMM Visual Troubleshooting	5-2
5A-1.	MTU Visual Troubleshooting	5A-3
8-1.	CCU Operating Malfunctions	8-3
8-2.	Circuit Card to Circuit Correlation	8-4
10-1.	SPA Visual Troubleshooting	10-2
11-1.	DE Troubleshooting Chart	11-2
11-2.	Interrupt Switch Test Switches	11-6
13-1.	ELP Hardware Fault Indications	13-2
13-2.	ELP Self-Test Fault Indications	13-5
13-3.	ELP Fault Indications for VFMED and BDU Configurations	13-9
14-1.	DPM Operational Check	14-4
15-1.	ETD Visual Troubleshooting	15-5
15-2.	ETD Troubleshooting Chart	15-7
16-1.	PCG Troubleshooting	16-2
19-1.	Self Test Failure Analysis	19-3
22-1.	VFMED or BDU Fault Isolation to Major Assembly	22-3
22-2.	Interpretation of Fault Numbers	22-8
22-3.	NET ACCESS Switch Actual Position Delay Readings	22-9
22-4.	RDT Operating Malfunctions	22-10
22-5.	Self-Test Fault Numbers	22-11
22-6.	Self-Test Fault Conditions	22-12
B-1.	Maintenance Allocation Chart for Fire Direction Center, Artillery OA-8390/GSG-10(V)	B-4
B-2.	Maintenance Allocation Chart for Fire Direction Center, Artillery Processing and Display OA-8389/GSG-10(V)	B-28
B-3.	Maintenance Allocation Chart for Message Entry Device, Variable Format AN/GSC-21	B-32
B-4.	Maintenance Allocation Chart for Data Display, Artillery Battery AN/GSQ-122	B-35
B-5.	Tool and Test Equipment Requirements for Fire Direction Center, Artillery AN/GSG-10(V)	B-36

LIST OF TABLES

VOLUME 2

Table	Title	Page
24-1.	Instruction Word CA Field Special Operand Addresses	24-8
24-2.	Page Access Control	24-19
24-3.	Program Level Condition Due to Program Activity Register	24-38
24-4.	Bit Position Arrangement of the Program Activity Register	24-39
24-5.	Privilege Status Bits	24-42
24-6.	Computer Level Change Register Control (Interrupt)	24-43
24-7.	Computer Level Change Register Control (Instruction)	24-44
24-8.	Level Control Bits	24-45
24-9.	Computer Level Link Example	24-47
24-10.	IOC Operating States	24-72
24-11.	RTC States	24-76
24-12.	Monitor Register Function	24-79
24-13.	Mode Selection Signals	24-87
24-14.	Memory Test Format (C = 00)	24-95
25-1.	TTC Start/Stop Times	25-6
31-1.	ASCII Codes	31-2
32-1.	ASCII Keyboard Codes	32-4
34-1.	Device Control Format on Information Lines	34-10
35-1.	OFR Word Formats	35-19
35-2.	Control Word Format	35-20
35-3.	Position Word Format	35-21
35-4.	Character Word Format	35-22
35-5.	ITR1 Word Format	35-23
35-6.	ITR3 Word Format	35-25
39-1.	Logic Circuit Card Code	39-3
39-2.	Lamp Test	39-6

LIST OF TABLES

VOLUME 3

Table	Title	Page
42-1.	Tools Required for Maintenance	42-4
42-2.	Test Equipment Supplied	42-8
42-3.	Materials Supplied	42-9
42-3A.	PMD Controls and Indicators	42-10B
42-4.	Items for Inspection	42-11
42-5.	Card Pin Identification	42-26D
42-6.	Connector List Column Explanations	42-30
42-7.	Wire Codes	42-33
42-8.	String and Double Entry List Column Explanations	42-35
42-9.	Logic List Column Explanations	42-39
42-10.	Uninsulated Bus	42-40
42-11.	MIL-W-16878 Type E Wire (Teflon)	42-41
42-12.	MIL-W-16878/1 Wire (Shielded)	42-42
42-13.	MIL-W-16878 Type E Wire (Shielded)	42-43
42-14.	MIL-W-16878 Type D Twisted Wire Pair	42-44
42-15.	Twisted Wire Pair	42-45
42-16.	Twisted Wire Triplet	42-46
42-17.	Twisted Wire Quad	42-47
42-18.	Twisted Wire Pair (Cable)	42-48
42-19.	Twisted Wire Pair (Shielded)	42-49
42-20.	Twisted Wire Pair (Shielded Drum Cable)	42-50
42-21.	Twisted Wire Triplet (Shielded Teflon Insulation)	42-51
42-22.	Twisted Wire Quad (Shielded)	42-52
42-23.	Coaxial Cable	42-53
42-24.	Grounding Ferrules	42-54
42-25.	Wire List Index	42-55
44A-1.	MTT and MTC Troubleshooting	44A-2
46-1.	NET ACCESS Switch Resistance Checks	46-3
46-2.	MODE Switch Resistance Checks	46-4
48-1.	RCMU Front Panel Wiring	48-4
51-1.	Keyboard Assembly Troubleshooting	51-2
53-1.	Inspection	53-2
53-2.	DPU Malfunction Analysis	53-3
54-1.	ETD Malfunction Symptoms	54-4
54-2.	ETD Troubleshooting Procedures	54-6
54-3.	Matrix of Adjustment After Replacement	54-17
54-4.	Crt Cable Connections	54-21
55-1.	Tripped Circuit Breaker Fault Isolation	55-3
55-2.	Output Power Loss Fault Isolation	55-7
58-1.	Self Test Failure Analysis	58-6
60-1.	Shelter Assembly Lighting System Troubleshooting	60-3
60-2.	Power Distribution System Troubleshooting	60-4

CHAPTER 1

INTRODUCTION

Section I. INTRODUCTION

1-1. Scope. This manual contains both organizational and direct support maintenance for the following items of Fire Direction System, Artillery AN/GSG-10(V):

a. Fire Direction Center, Artillery OA-8390/GSG-10(V)

b. Fire Direction Center, Artillery, Processing and Display OA-8389/GSG-10(V)

c. Data Display, Artillery, Battery AN/GSQ-122

d. Message Entry Device, Variable Format AN/GSC-21

1-2. System Equipments. The equipments of the items listed above are shown in table 1-1 along with their common names and abbreviations. From this point forward in this manual, only common names and abbreviations listed in table 1-1 will be used to identify equipment.

1-3. Manual Organization. This manual is divided into four volumes. Volume 1, comprised of chapters 1 thru 22 and appendices A, B, and C, contains organizational level maintenance for equipments of the TACFIRE system. Appendix A contains a list of referenced publications, appendix B contains the maintenance allocation chart, and appendix C contains the glossary. Volume 2, comprised of chapters 23 thru 40, contains functional descriptions of the equipments of the TACFIRE system. Volume 3, comprised of chapters 41 thru 61, contains direct support level maintenance for equipments of the TACFIRE system. Throughout this manual, reference is made to RPSTL figures that are contained in volume 4, appendix D. All foldout illustrations are located at the end of the volume in which they are first referenced. Chapter 3, in volume 1, and chapter 42, in volume 3, are general maintenance chapters and contain maintenance information that is applicable to two or more equipments. Therefore, instead of repeating this type of information in various equipment maintenance chapters, it is provided once in the applicable general maintenance chapter and referenced in the specific equipment chapters.

1-4. Maintenance Forms and Records. Department of the Army forms and procedures used for equipment maintenance will be those prescribed by TM 38-750.

1-5. Equipment Publications. Refer to the latest issue of DA PAM 310-4 to determine if there are new editions, changes, or additional publications pertaining to the equipment. Refer to the latest issue of DA PAM 310-7 to determine if there are Modification Work Orders (MWOs) pertaining to the equipment.

1-6. Reports of Packaging and Handling Deficiencies. Complete and forward Report of Packaging and Handling Deficiencies as prescribed in AR 700-58.

Table 1-1. Equipment Nomenclature, Common Names, and Abbreviations

Nomenclature	Common name	Abbreviation
Fire Direction System, Artillery AN/GSG-10(V)	Artillery fire direction system	TACFIRE
Fire Direction Center, Artillery OA-8390/GSG-10(V)	DivArty fire direction center	DivArty FDC
Fire Direction Center, Artillery, Processing OL-48/GSG-10(V)	DivArty computer group	–
Shelter, Electrical Equipment S-490/GSG-10(V)	DivArty computer shelter	–
Fire Direction Center, Artillery, Display OK-144/GSG-10(V)	DivArty display group	–
Shelter, Electrical Equipment S-492/GSG-10(V)	DivArty display shelter	–
Fire Direction Center, Artillery, Processing and Display OA-8389/GSG-10(V)	Battalion fire direction center	Bn FDC
Shelter, Electrical Equipment S-491/GSG-10(V)	Bn computer and display shelter	–
–	Power entry panel	PEP
Converter Group, Power OU-41/GSG-10(V)	Power converter group	PCG
Terminal Box J-3320/GSG-10(V)	DivArty communications terminal box	CTB
Terminal Box J-3321/GSG-10(V)	Bn communications terminal box	CTB
Terminal Box J-3355/GSG-10(V)	Communications junction box	CJB
Computer, Digital AN/GYK-12(V)1	Computer	–
Computer, Digital AN/GYK-12(V)2	Computer	–
Central Processing Unit MX-8950/GYK	Central processing unit	CPU
Input/Output Unit MX-8951/GYK	Input/output unit	IOU
Memory Unit, Mass Core MU-619/GYK	Mass core memory unit	MCMU
Console, Artillery Control OJ-70/GSG-10(V)	Artillery control console	ACC
–	Switch panel assembly	SPA
–	Display editor	DE
–	Keyboard	–
Line Printer, Electronic RO-344/GSG-10(V)	Electronic line printer	ELP
Control, Tape Transport Cartridge C-8756(V)1/GYK	Single removable media memory unit (with ARMM)	Single RMMU
Control, Tape Transport Cartridge C-8756(V)2/GYK	Dual removable media memory unit (with ARMMs)	Dual RMMU
–	Auxiliary removable media memory	ARMM
Tape Transport Cartridge MX-8952/GYK	Tape transport cartridge	TTC

620-1

Table 1-1. Equipment Nomenclature, Common Names, and Abbreviations – Continued

Nomenclature	Common name	Abbreviation
Control, Magnetic Tape Unit C-10679(V)1/GYK12(V)	Single removable media memory unit (with MTU)	Single RMMU
Control, Magnetic Tape Unit C-10679(V)2/GYK12(V)	Dual removable media memory unit (with MTUs)	Dual RMMU
–	Magnetic tape unit	MTU
–	Magnetic tape transport	MTT
–	Magnetic tape cartridge	MTC
Converter, Data CV-2863(V)1/G	Auxiliary data terminal unit	Auxiliary DTU
Converter, Data CV-2863(V)2/G	Data terminal unit	DTU
–	Digital data terminal	DDT
Display Unit, Digital Plotting PT-493/G	Digital plotter map	DPM
Control, Plotting Display C-8819/G	Display control unit	DCU
Recorder, Plotting Display RO-427/G	Display plotting unit	DPU
Display, Tactical Electronic AN/GSQ-121(V)	Electronic tactical display	ETD
Control, Communications C-9901/G	Communications control unit	CCU
Monitor, Remote Communications MX-9842/G	Remote communications monitor unit	RCMU
Test Set, Module AN/GSM-208	Module test set	MTS
Data Display, Artillery, Battery AN/GSQ-122	Battery display unit	BDU
Control, Data Display C-10096/GSQ-122	Communications unit	CU
–	Remote data terminal	RDT
Message Entry Device, Variable Format AN/GSC-21	Variable format message entry device	VFMED
Control, Message Entry C-10097/GSC-21	Message entry group	MEG

620-2

1-7. Discrepancy in Shipment Report. Complete and forward Discrepancy in Shipment Report (DISREP) as prescribed in AR 55-38.

1-8. Destruction of Army Material to Prevent Enemy Use. In the event that capture of this equipment appears imminent, or if the equipment must be abandoned, it should be destroyed to prevent enemy use. Destruction procedures should be carried out only on orders from the cognizant authority. Refer to the destruction plan for the appropriate procedures. Prime items requiring destruction are the recorded TTCs, MTCs, and cryptographic (crypto) equipment.

1-9. Administrative Storage. Refer to TM 740-90-1, Administrative Storage, for information covering the administrative storage requirements of this system.

1-10. Calibration. Pertinent publications on the calibration of the equipment covered by this manual are referenced as required by the procedures contained herein.

1-11. Reporting of Errors. The reporting of errors, omissions, and recommendations for improving this publication by the individual user is encouraged. Reports should be submitted on DA Form 2028 (Recommended Changes to Publications) and forwarded directly to: Commanding General, U.S. Army Electronics Command, ATTN: DRSCL-MA-PCA, Fort Monmouth, N. J. 07703.

Section II. DESCRIPTION AND DATA

1-12. Description. General descriptions of the systems covered by this manual and the equipments that comprise these systems are provided in the applicable operator's manual. Refer to TM 11-7440-240-10 for descriptions and illustrations of the Bn FDC. Refer to TM 11-7440-241-10 for descriptions and illustrations of the DivArty FDC. Refer to TM 11-7440-251-10 for descriptions and illustrations of the BDU. Refer to TM 11-7440-253-10 for descriptions and illustrations of the VFMED.

1-13. Tabulated Data. Technical characteristics, system components, and system nomenclature are tabulated in the applicable operator's manuals. Refer to TM 11-7440-240-10 for tabulated data for the Bn FDC. Refer to TM 11-7440-241-10 for tabulated data for the DivArty FDC. Refer to TM 11-7440-251-10 for tabulated data for the BDU. Refer to TM 11-7440-253-10 for tabulated data for the VFMED.

Section III. SERVICE UPON RECEIPT AND INSTALLATION

1-14. Service Upon Receipt. Instructions for service upon receipt are provided in the applicable operator's manuals. Refer to TM 11-7440-240-10 for service upon receipt instructions for the Bn FDC. Refer to TM 11-7440-241-10 for service upon receipt instructions for the DivArty FDC. Refer to TM 11-7440-251-10 for service upon receipt instructions for the BDU. Refer to TM 11-7440-253-10 for service upon receipt instructions for the VFMED.

1-15. Installation. Instructions for installing and reconfiguring the system, and for installation of troop installed equipment are contained in the applicable operator's manuals. Refer to TM 11-7440-240-10 for installation instructions for the Bn FDC. Refer to TM 11-7440-241-10 for installation instructions for the DivArty FDC. Refer to TM 11-7440-251-10 for installation instructions for the BDU. Refer to TM 11-7440-253-10 for installation instructions for the VFMED.

CHAPTER 2

FIRE DIRECTION CENTER FUNCTIONAL DESCRIPTION

Section I. INTRODUCTION

2-1. Introduction.

This chapter describes the hardware functions of the equipment contained in the DivArty FDC and the Bn FDC at the FDC level. Data is also provided on the functions of the remotely located equipment. Section II describes the DivArty FDC functions, section III describes the Bn FDC functions, and section IV describes the remote unit functions. The primary differences between the DivArty FDC and Bn FDC are as follows:

DivArty FDC	Bn FDC
a. Equipment is housed in two shelters (computer group and display group)	Equipment is housed in one shelter
b. Two PCGs	One PCG
c. Dual RMMU (two ARMMs or two MTUs)	Single RMMU (one ARMM or one MTU)
d. Two ELPs	One ELP
e. One ETD	No ETD
f. Three DTUs and one auxiliary DTU (total of seven DDTs)	Three DTUs and no auxiliary DTU (total of six DDTs)
g. One internal RCMU and two external RCMUs	One internal RCMU and one external RCMU
h. Four MCMUs	Three MCMUs

Section II. DIVARTY FDC FUNCTION

2-2. Major Functions. Three major functions are performed by the DivArty FDC: information input, information processing, and information display. The assemblies performing these functions are shown in figure 2-1 and detailed in the following paragraphs.

a. *Information Input Function.* All information regarding artillery operations such as fire requests, target intelligence, meterological data, etc., must be converted into a digital format. The information input units are the remotely located DMD and VFMED, and the ACC, which is located within the FDC. Information can also be received from other FDCs.

b. *Information Processing Function.* The information processing function is performed by the computer. The computer consists of six units: the CPU, the IOU, and the four MCMUs. Immediately adjacent to the computer are seven DDTs (contained in three DTUs and one auxiliary DTU) and two ARMMs or two MTUs (contained in a dual RMMU). The DDTs convert audio signals, received from a radio or wire circuit through the CCU, into digital form for use by the computer. The ARMMs (or MTUs) are not a part of the processing function but are used to provide data to start up or initialize the system. Information concerning the operational needs of the DivArty FDC is processed within the computer. As messages are received by the computer in digital form, they are decoded or classified by types, and are then operated upon by certain selected modules that make up the computer. The information may be stored in the MCMUs after being received through the IOU, it may be used to initiate immediate computations or calculations, or it may be displayed on the various display devices.

c. *Information Display Function.* The information display function is performed by the ELP, the DPM, the ETD, and the ACC. Information received from, and transmitted to, the DivArty FDC, information processing function can be printed on the ELP. Targets, fire lines, troop and equipment locations, and similar data can be displayed on the DPM. Data consisting of standard symbols and alphanumerics can be displayed on the ETD. The ACC is composed of four units; the SPA, the keyboard, and two DEs (the upper one called the RD and the lower one called the CED). The SPA controls the movement of data to and from the computer and also enables data consisting of messages to be sent to other FDCs, VFMEDs, or batteries. The RD displays messages addressed to the FDC, while the CED displays messages being composed or edited. The keyboard permits changing the received data or generating information in the form of ASCII-coded alphanumeric data, which can then be inserted into the computer for processing. The DPM is used to draw symbols and data directly on an acetate overlay covering a conventional Army map. The ELP, located in the shelter and also remotely at VFMEDs and BDUs, provides a printed copy of all fire orders or commands that are generated as a result of information fed into the TACFIRE system.

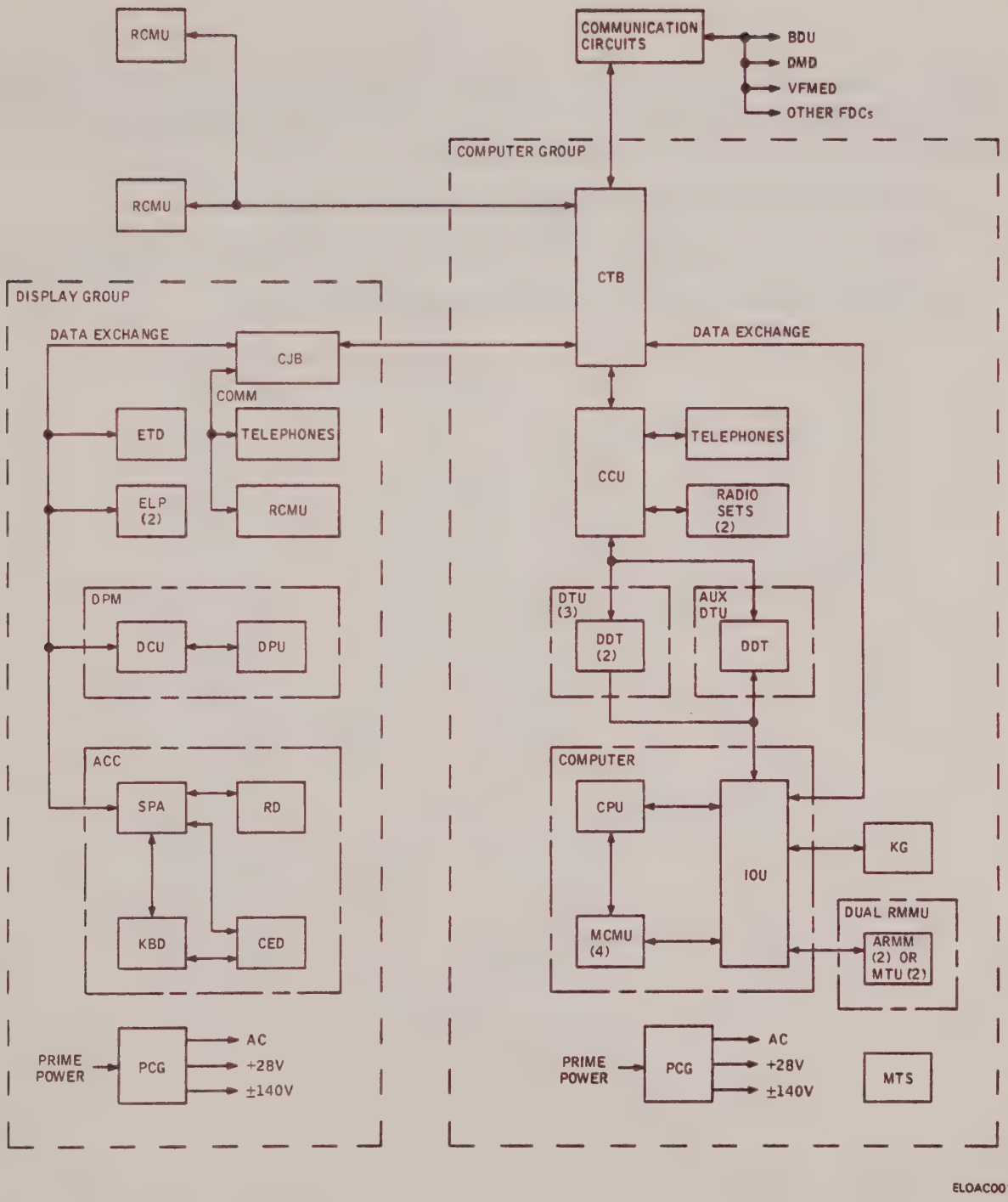

Figure 2-1. DivArty FDC Overall Block Diagram

Section III. Bn FDC FUNCTION

2-3. Major Functions. The Bn FDC performs the same three major functions as the DivArty FDC (fig. 2-1). The following paragraphs discuss the minor differences between the Bn FDC and the DivArty FDC. The assemblies that perform the Bn FDC functions are shown in figure 2-2.

a. *Information Input Function.* This function is identical to the DivArty FDC.

b. *Information Processing Function.* The Bn FDC has a single RMMU instead of a dual RMMU.

c. *Information Display Function.* The Bn FDC has only one ELP and no ETD.

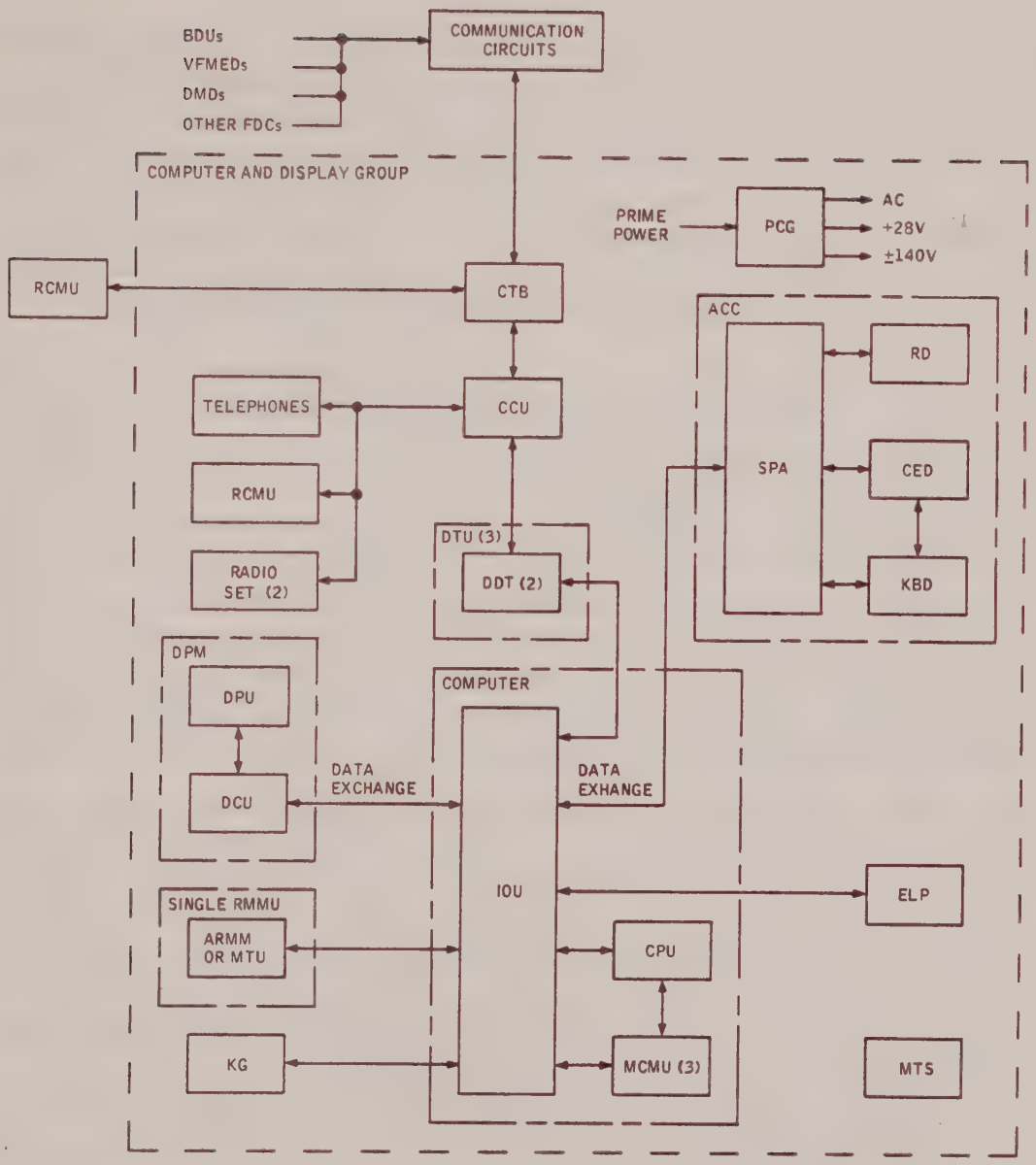

Figure 2-2. Bn FDC Overall Block Diagram

Section IV. REMOTE UNIT FUNCTION

2-4. Major Functions. The remote units associated with the FDC are the DMD, VFMED, and the BDU. The DMD is used by forward observers to convert artillery operational data messages into digital form for transmission to the FDC. For detailed information on the DMD, refer to PDEPTM 11-7440-281-14. The VFMED is used in a similar manner by the fire support officer (FSO) at a supported maneuver element. These messages are used to request a fire mission, adjust fire, and report targets. The BDU, located at each firing battery site, displays fire commands, fire plans, etc. The BDU cannot transmit messages except to acknowledge receipt or request retransmission of received messages. The remote units are shown functionally in figures 2-1 and 2-2. The VFMED and BDU are described in the following paragraphs.

a. *VFMED.* The VFMED is capable of sending, receiving, copying, composing, and editing radio or wire-transmitted digital messages (see fig. 2-3). Storage and display of messages is provided with the DE. Data entry and operational mode selection are accomplished by means of a keyboard. Hard-copy printout of all received, and selected transmitted, messages is provided by the ELP. Interface with wire or radio communication links is provided by the RDT. The ELP is the basic display for received messages and provides a permanent record of all incoming and operator-selected messages transmitted from the DE. The DE and keyboard are used to compose, edit, and transmit messages. Corrections to the composed messages are made by typing over or clearing the incorrect message segment. In addition to message composition, the DE can be used to receive and store messages. This permits relay of incoming messages without the need to manually enter data and allows the DE to be used as a backup for the ELP. The RDT provides proper signal conditioning required by the communications channel, and also detects and corrects errors.

b. *BDU.* The BDU is capable of receiving and copying radio-transmitted digital messages (see fig. 2-4). Hard-copy printout of all received messages is provided by the ELP. A fixed-format message generator, contained in the ELP, allows rapid acknowledgment and request for message retransmission. Interface with wire or radio communication links is provided by the RDT. The ELP is the basic display for received messages and provides a permanent record of all incoming messages. The ELP contains circuitry to generate fixed-format messages to indicate receipt of an error-free message (automatic acknowledge), a manually-initiated acknowledgment that the BDU operator understands the received message (manual acknowledge), and a manually-initiated retransmit message if the operator cannot read the message (manual retransmit). The RDT provides the signal conditioning required by the communications channel, and detects and corrects errors. Should an error be uncorrectable, the RDT causes the ELP to display a unique character, (<>), in place of the erroneous character.

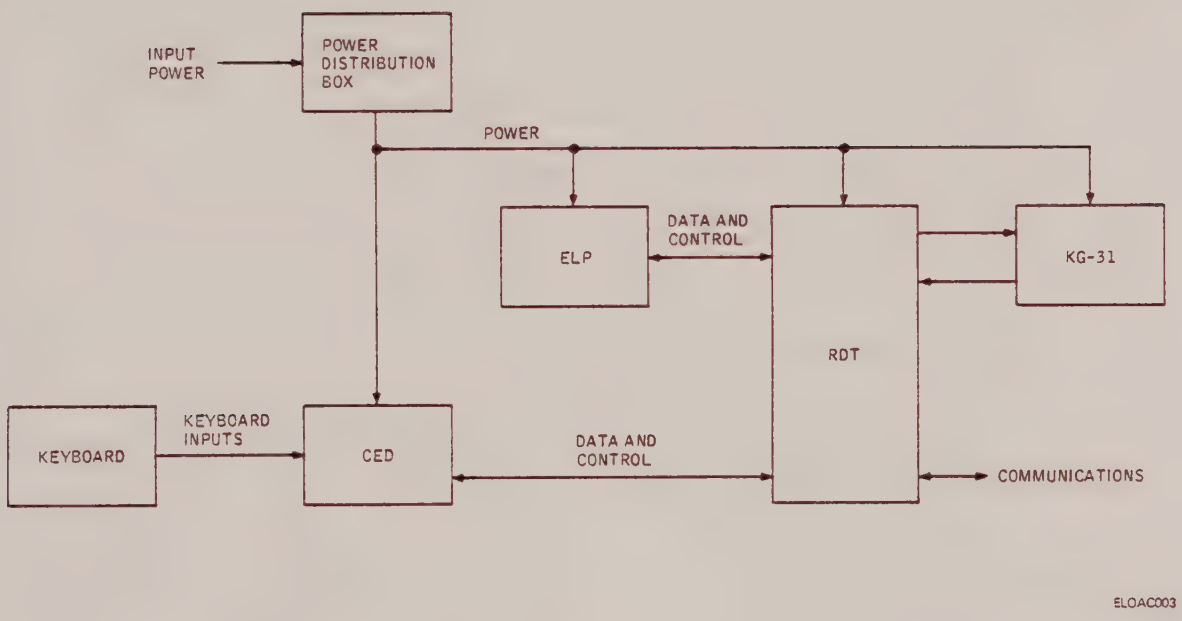

Figure 2-3. VFMED Overall Block Diagram

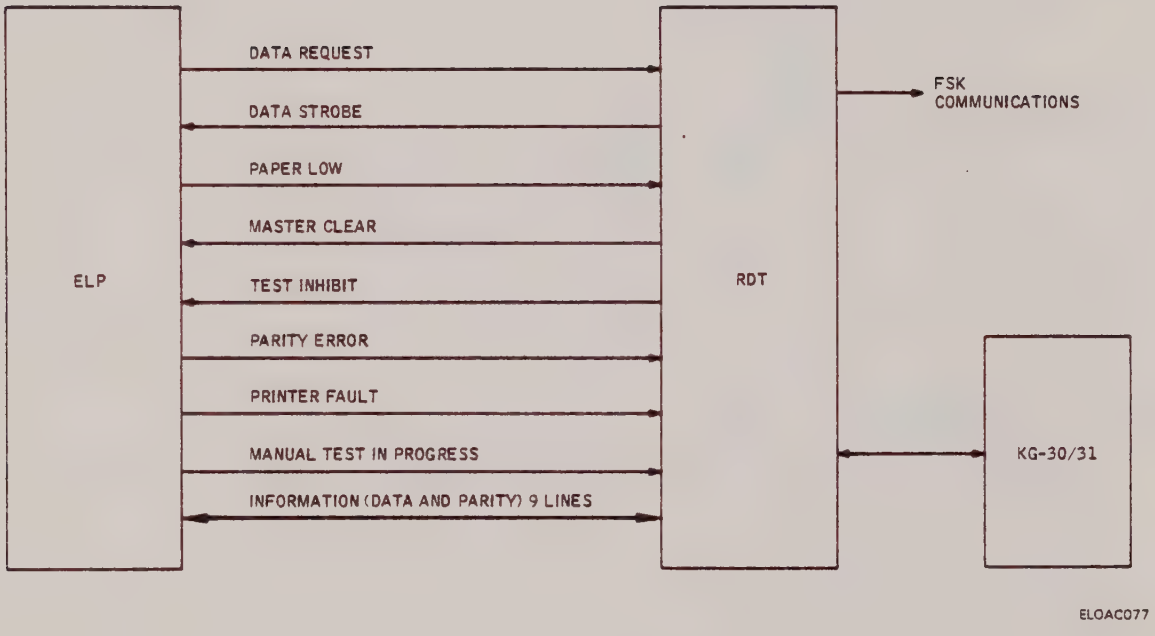

Figure 2-4. BDU Overall Block Diagram

CHAPTER 3

ORGANIZATIONAL GENERAL MAINTENANCE

Section I. INTRODUCTION

3-1. Scope. This chapter provides information for organizational level maintenance of the TACFIRE equipment at the system level.

Section II. SHIPMENT AND LIMITED STORAGE

3-2. Introduction. The TACFIRE system and its packaging methods provide suitable protection for the units during shipment and limited storage. The transit case structure is designed to protect the components against effects of moisture and other environmental conditions.

3-3. Shipment. The DivArty and Bn FDCs can be shipped by various methods: rail and ship transport; helicopter transport; vehicle mounted; out-of-shelter. The preparations for movement or shipment are minimal in each case. The following paragraphs state the necessary steps to be followed. For shipment by fixed-wing aircraft, use the rail or ship transport method or out-of-shelter method (as defined in the following paragraphs), compatible with the aircraft.

3-4. Rail or Ship Transport Proceed as follows to prepare for rail or ship transport:

a. Place FDC in the in-shelter, ground-mounted configuration; refer to chapter 2 of either TM 11-7440-240-10 or TM 11-7440-241-10.

b. Using a torque wrench, tighten transit case captive-bolts that fasten cases into racks. Tighten ACC bolts from 65 to 80 foot-pounds and other units from 40 to 80 foot-pounds to prevent shock-damage to equipment during rough movement.

c. To ship equipment as unclassified, purge system and remove all recorded computer program cartridges; refer to operator's manual. Remove KG-30/KG-31. Turn tape cartridges and KG-30/KG-31 over to the cognizant authority for shipment of SECRET-CRYPTOGRAPHIC equipment. Remove classified documentation and handle it in accordance with appropriate regulations.

d. Remove pen from DPM; refer to operator's manual.

e. Unfasten CCU and slide to service position. Remove cable from battery connector J1. Slide CCU into transit case and fasten.

f. Secure folding chairs against shelter wall with strap; refer to chapter 2 of operator's manual. Secure operator chair(s) to shelter floor.

g. Lock DPM bridge.

h. Stow and secure all loose gear in shelter. Withdraw ground stakes from ground and stow.

i. Verify that all card retainers are in the locked position.

j. Verify that all screw-retained cards, modules, and power supplies are properly secured.

k. Verify that all equipment front panels are properly secured to transit cases.

l. For DivArty FDC, verify that ETD rack is properly secured (8 bolts). (Refer to fig. 15-1.)

m. Dismount air-conditioner and install it in its in-shelter transport location; refer to chapter 2 of operator's manual.

n. Place air-conditioner mount in its transport position; refer to chapter 2 of operator's manual. Stow sling in its transport location in shelter; refer to operator's manual.

o. Install air-conditioner cover over air-conditioner shelter opening; refer to chapter 2 of operator's manual.

p. Remove radio antennas, mast bases, and brackets. Stow them securely in shelter. Refer to operator's manual for stowage location.

q. Check pallet for proper stowage and tiedown of items.

r. Place cables on reels and secure.

s. Lock shelter door.

t. Mark equipment as required.

u. Prepare trucks and generators for shipment as required by applicable DATM.

3-5. Helicopter Transport. This paragraph covers preparation for movement by helicopter as an external or slung load. For transport as an internal load see out-of-shelter transport, paragraph 3-7.

a. Perform steps a, c thru k, and o thru t of paragraph 3-4.

b. Install shelter sling for helicopter lift.

NOTE

This procedure is the same as that for the crane lift except for no guy ropes; refer to operator's manual, chapter 2.

c. Refer to applicable DATM, FM, or lift order for additional data or instructions.

3-6. Vehicle Mounted Transport. Proceed as follows to prepare for vehicle mounted transport:

a. Place FDC in the in-shelter, vehicle-mounted configuration. Refer to operator's manual, Chapter 2.

b. Secure folding chairs against shelter wall with strap; refer to chapter 2 of operator's manual. Secure operator chair(s) to shelter floor.

c. Stow and secure all loose gear in shelter. Withdraw ground stakes from ground and stow.

d. Verify that all card retainers are in the locked position.

e. Verify that all screw-retained cards, modules, and power supplies are properly secured.

f. Verify that all equipment front panels are properly secured to transit cases.

g. For DivArty FDC, verify that ETD rack is properly secured (8 bolts). (Refer to fig. 15-1.)

h. Check pallet for proper stowage and tiedown of items.

i. Verify that all transit case bolts are properly secured.

CAUTION

Failure to disconnect external cables will cause equipment damage when vehicle is moved.

j. If connected, disconnect cables to ac generator and dc power sources (except for shelter vehicle) and external communications lines and cables. Place cables on reels and secure.

k. Prepare trucks and generators for shipment as required by applicable DATM.

l. Place pallet assembly and cables in assigned transport.

m. Perform instructions of paragraph 3.4c if unclassified shipment is required.

n. Check air conditioner and CPE installation and mounting; tighten as required. Put air conditioner flap down.

o. Remove antennas; stow or tie down as appropriate.

NOTE

The total functional height of the FDC on the vehicle, with antennas installed, is about 300 inches; without antennas, 137 inches.

p. Lock DPM bridge and stow DPM pen.

q. Inspect shelter (inside and outside), shelter tie-downs, air conditioner, and vehicles prior to movement. Refer to appropriate displacement procedures in operator's manual, chapter 4.

3-7. Out-of-Shelter Shipment. Proceed as follows to prepare for out-of-shelter shipment:

a. Remove unit or assembly being shipped from in-shelter or out-of-shelter mounting.

b. Securely tighten all front panel bolts.

c. Securely tighten all front panel-to-transit case bolts.

d. Obtain correct cover from pallet assembly.

NOTE

If the DPU is being shipped, refer to step h.

e. If required for shipment, refer to figures 3-1 thru 3-5 which show the method of storing materials in the case covers of the PCG, DTU, ACC, CCU, and ETD, respectively. To store keyboard in ACC cover, remove screws and washers securing keyboard holder to cover (refer to figure 3-3). Slide front end of keyboard under fixed retaining bracket. Replace screws and washers securing keyboard holder on opposite side of keyboard.

f. Attach cover to transit case.

g. If there is no individual transit case for the assembly being shipped, proceed as follows:

(1) For DDT, DE, keyboard, ARMM, or MTU, contact direct support maintenance and obtain appropriate shipping container. If none is available and immediate shipment is required, pack assembly securely in strong box and pad firmly on all sides.

(2) For other items, pack securely as in (1) above.

h. To ship DPU, proceed as follows:

(1) Remove pen from DPM, refer to operator's manual.

(2) Lock DPM bridge.

(3) Remove DPM from shelter.

(4) If cover tripod assembly is not in cover, install it there. Refer to operator's manual.

(5) Install cover on plotter.

3-8. Limited Storage. Perform the following for limited storage:

a. Remove pen from DPM. Refer to operator's manual.

b. Remove batteries from telephones.

c. Purge equipment and properly stow all classified equipment and data. Remove paper from ELP.

d. Roll cover down on air-conditioner and secure.

e. Remove and stow radio antennas.

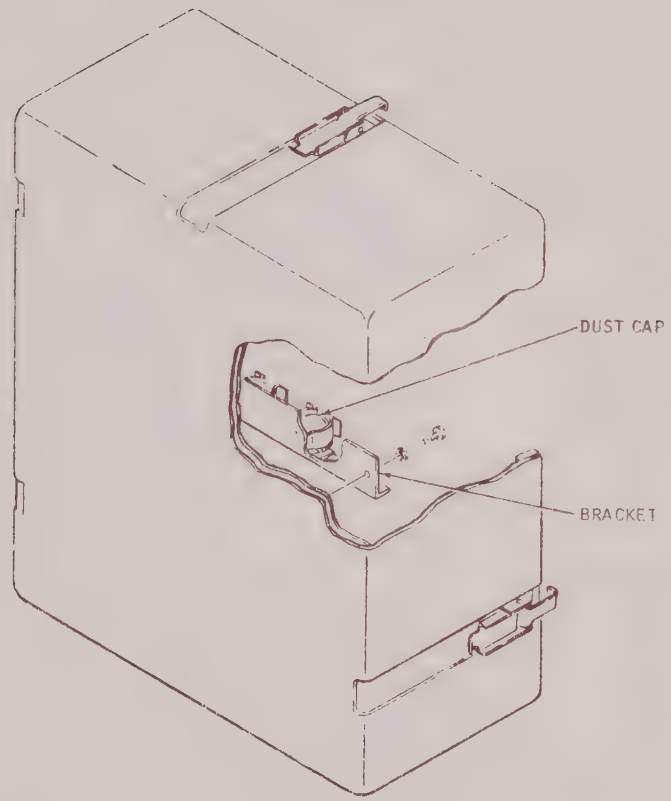

FLOAC005

Figure 3-1. PCG Cover Storage Diagram

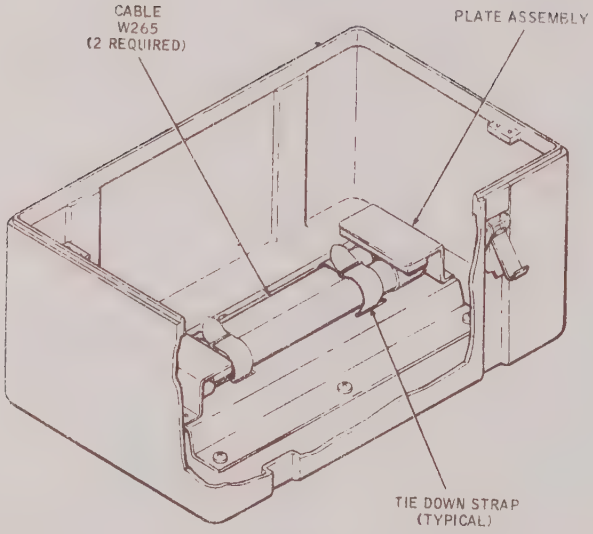

NOTE:
COVER CONTAINS TWO EACH CABLES

EL0AC006

Figure 3-2. DTU Cover Storage Diagram

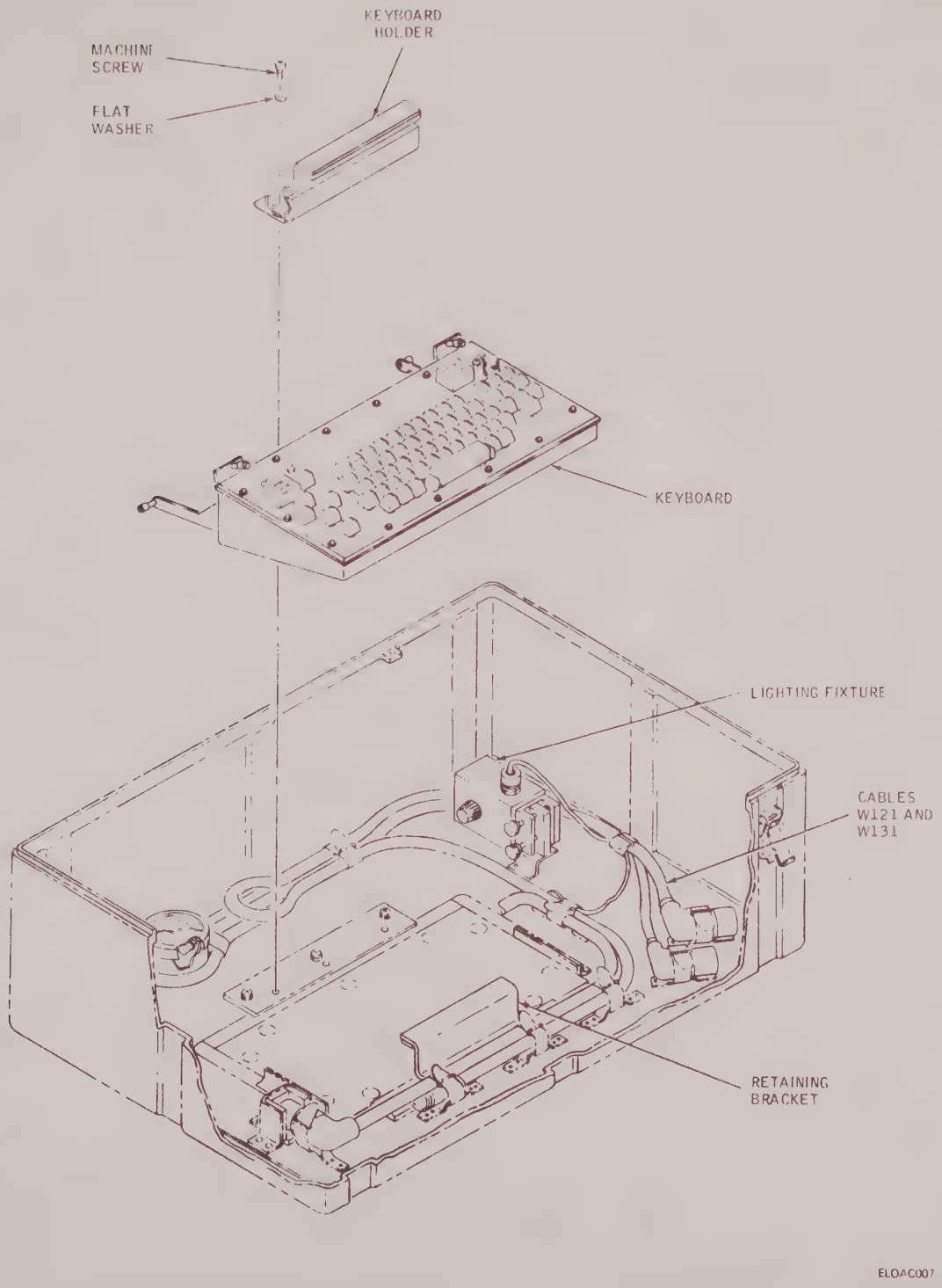

Figure 3-3. ACC Cover Storage Diagram

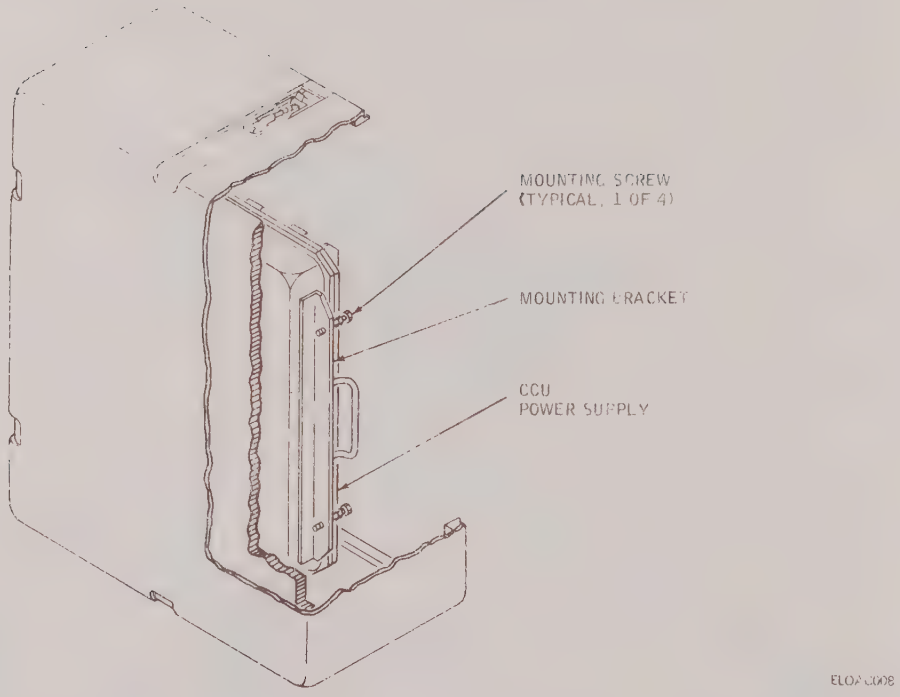

Figure 3-4. CCU Cover Storage Diagram

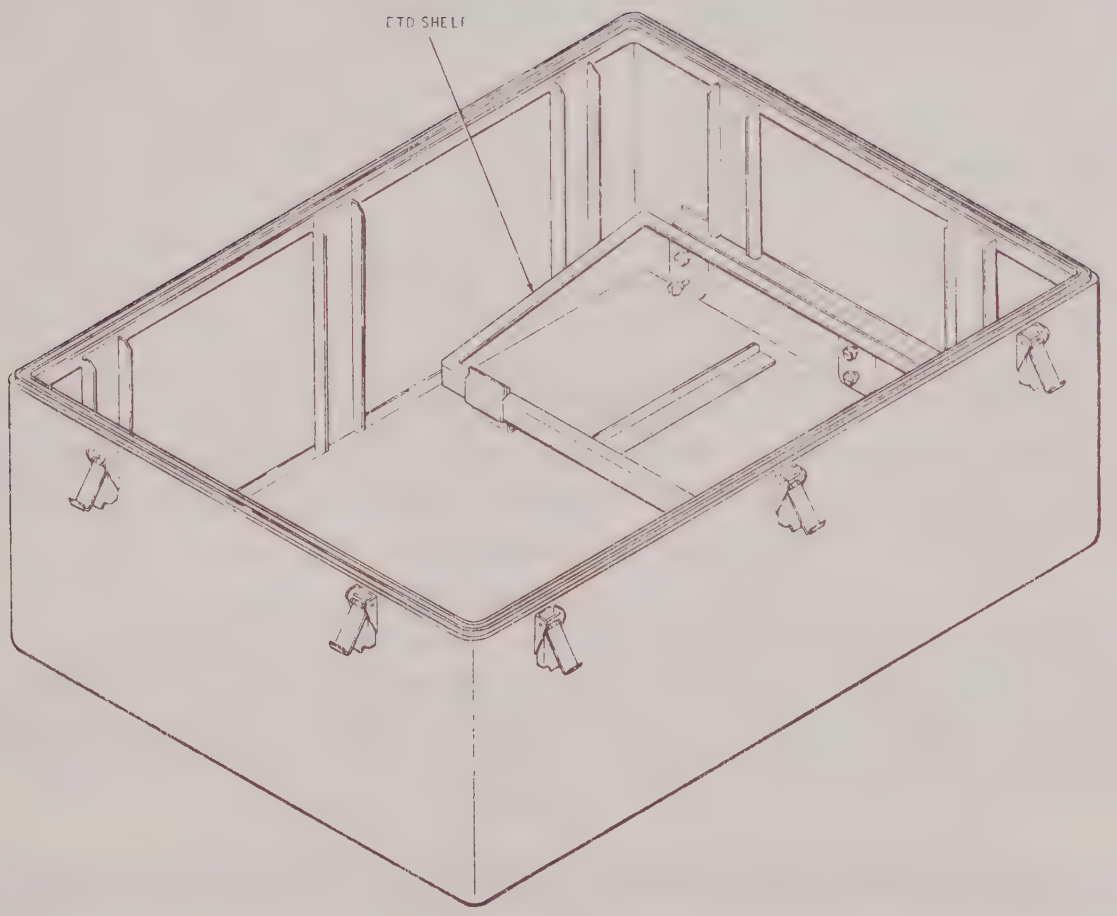

EL0AC009

Figure 3-5. ETD Cover Storage Diagram

f. Place external cables on reels and stow.

g. Secure other equipment as required.

3-9. Storage in Extreme Climatic Environments. Storage for periods up to two years, under all climatic conditions except tropical, does not require any special preparation. Nominal protective measures to minimize effects of rain, sand, dust, and sunlight should be provided. Such measures will minimize in-storage deterioration of external paint and the secondary effects of corrosion and fungus (primarily if stored in tropics). In addition, such measures can reduce preventive maintenance time when the equipment is removed from storage. Although the paints and finishes of the equipment are resistant to fungus in a tropical environment, paint on the basic S280 equipment shelters is more susceptible to fungus growth. A rigorous maintenance program for the shelter finish should be followed, therefore, to prevent fungus.

3-10. Removal from Storage. When removing equipment from storage, observe the precautionary measures detailed in the following paragraphs.

a. *Preliminary Steps.* Depending on the specific climatic conditions existing at the time of removal from storage, certain preliminary steps may be required. In addition, special handling may be required depending on the climatic environment during the storage period.

(1) *Extreme cold at time of removal.* If the temperature is below 0°F (−18°C) and above −40°F, warm up equipment as follows: install air-conditioner, set thermostat to +65°F, and energize heater. When equipment temperature stabilizes at +65°F, proceed normally. If the temperature is below −40°F, move the equipment to a slow warmup enclosure and raise the temperature to −40°F (at a rate not to exceed 3°F per hour); maintain for at least two hours, then proceed as above.

(2) *Humid storage.* If the storage environment has been damp, or the equipment has been subjected to wide fluctuations in daily temperatures, dry out equipment as follows: install air-conditioner, set thermostat to +65°F, and energize. After 36 hours, open transit cases. After another 12 hours, proceed normally. As an alternative, the equipment can be dried out as follows: move equipment to a controlled environment enclosure with an ambient temperature of about 73°F and a relative humidity of less than 50 percent for 24 hours; open transit cases for 12 hours and proceed normally.

b. *Preventive Maintenance.* When equipment is removed from storage, perform all applicable preventive maintenance. Refer to section V of this chapter and to the appropriate operator's manual for preventive maintenance to be performed by the operator and crew.

c. *Inspection.* Inspect all assemblies and hardware for corrosion, fungus, sand, dust, and deteriorated paint. Take corrective action as required; refer to applicable manual. If, during storage, the equipment has been subjected to blown sand or dust, thoroughly check and clean all transit case/assembly slide rail assemblies.

d. *Checkout.* Subsequent to performing preventive maintenance and inspection, energize and check out equipment as specified in the appropriate operator's manual. Also, perform all fault detection, fault isolation, and performance tests as part of this checkout.

Section III. TOOLS, TEST EQUIPMENT, AND MATERIALS REQUIRED

3-11. Introduction. The tools, test equipment, and materials required for organizational maintenance of the TACFIRE equipment are directly related to the troubleshooting and repair actions authorized in the maintenance allocation chart (MAC) in appendix B of this manual.

3-12. Tools and Test Equipment. All standard and common tools required for organizational maintenance of the TACFIRE equipment are listed in table 3-1. The only special tools and test equipment are the MTS and the card extractor supplied with it. The card extractor is used to remove plug-in circuit card assemblies from the major units of the FDC.

3-13. Module Test Set. The MTS is used for testing 24 types of digital circuit cards without removing the cards from the malfunctioning unit. Major unit malfunctions are isolated to a particular digital card by displaying card test results on a go, no-go basis and on a fault indicator matrix. The MTS will detect and display shorts in card or unit wiring to power by a short-to-5v test; shorts in card or unit wiring to ground by a short-to-ground test; continuity faults in card or unit signal wiring by a continuity test; and functional operating faults by a functional test. The MTS controls and indicators are shown in figure 3-6 and described in table 3-2. MTS connectors are shown in figure 3-7, and their functions are listed in table 3-3. Operating procedures for in-system and individual card tests are contained in section VII of this chapter.

3-14. Materials. Table 3-4 lists the materials required for maintenance of the equipment in the FDC, as related to the removal and replacement procedures and preventive maintenance instructions in this manual.

3-15. Lamps. Table 3-5 lists all lamps used at the Bn FDC, and table 3-6 lists all lamps used at the DivArty FDC.

3-16. Mission Essential Parts. Mission essential parts (MEP) consist of replacement cards and modules and other items necessary for sustaining a stock of critical supplies. These items are stored in various drawers and containers within the shelters and are identified and located as shown in figures 3-8 thru 3-10. Tables 3-7 and 3-7A list the contents of each container and also indicate the shelter to which it applies.

NOTE

Table 3-7 applies to systems containing ARMMs, and table 3-7A is applicable for systems containing MTUs.

3-17. Circuit Cards and Modules. Refer to the RPSTL for location and identification of all plug-in cards and modules.

Table 3-1. Tools Required for Maintenance

Item	Federal stock no. or part no.	Description	TK-101/G	TK-223	TK-225
1	8020-245-4509	Brush, paint			X
2	8020-239-0950	Brush, stiff bristle			X
3	7910-264-9119	Cleaner, vacuum			X
4	5120-243-7325	Extension, socket wrench, 1/4-inch drive x 6 inches long	1	1	1
5	5120-243-7326	Extension, socket wrench, 1/2-inch drive x 5 inches long		X	
6	5120-227-8074	Extension, socket wrench, 1/2-inch drive x 10 inches long		X	
7	5120-288-8716	Finger, mechanical			X
8	6230-264-8261	Flashlight, MX-991/U	X		
9	5120-230-6364	Handle, socket wrench, 1/2-inch drive x 16 inches long		X	
10	5120-230-6385	Handle, socket wrench, ratchet, 1/2-inch drive x 9 inches long		X	
11	5120-236-7590	Handle, socket wrench 1/2-inch drive x 14-1/2 inches long		X	
12	5120-965-0298	Key set, socket head screw	X		
13	5110-240-5943	Knife, electrician's	X		
14	5120-221-1536	Knife, putty			X
15	5120-596-1098	Mirror, inspection	X		
16	5140-830-5681	Roll, tool and accessories		X	X
17	5120-908-6339	Pliers/AN connector		X	
18	5110-965-0974	Pliers, diagonal cutting, 4 inches	X		
19	5110-293-3486	Pliers, short-nose, 4 inches	X		
20	5120-223-7396	Pliers, slip-joint, 6 inches	X		
21	5120-278-0352	Pliers, slip-joint, 10 inches			X
22	6625-146-1797	Probe, shorting			X
23	5120-287-2129	Screwdriver, double offset, 5/32-inch x 3 inches long	X		
24	4120-288-9710	Screwdriver, double offset, 5/16-inch x 5 inches long	X		
25	5120-236-2140	Screwdriver, flat tip 1/8-inch x 2 inches long	X		
26	5120-596-8502	Screwdriver, flat tip 1/4-inch x 1-1/2 inches long	X		
27	5120-222-8852	Screwdriver, flat tip 1/4-inch x 4 inches long	X		
28	5120-278-1267	Screwdriver, flat tip 9/64-inch x 8 inches long	X		

See footnote at end of table.

632-1

Table 3-1. Tools Required for Maintenance – Continued

Item	Federal stock no. or part no.	Description	TK-101/G	TK-223	TK-225
29	5120-278-1270	Screwdriver, flat tip 3/16-inch x 5 inches long	X		
30	5120-278-1283	Screwdriver, flat tip 5/16-inch x 6 inches long			X
31	5120-240-8716	Screwdriver, Phillips No. 1, 3 inches long	X		
32	5120-240-8913	Screwdriver, Phillips No. 2, 4 inches long	X		
33	5120-988-7074	Screwdriver, Phillips No. 3, 6 inches long			X
34	5120-596-0882	Screwdriver, ratchet	X		
35	5120-892-5931	Screwdriver, ratchet	X		
36	5120-241-3186	Socket, socket wrench, 3/8-inch x 1/4-inch drive	1	1	1
37	5120-237-0984	Socket, socket wrench, 1/2-inch x 1/2-inch drive		X	
38	5120-189-7932	Socket, socket wrench, 9/16-inch x 1/2-inch drive		X	
39	5120-189-7946	Socket, socket wrench, 5/8-inch x 1/2-inch drive		X	
40	5120-189-7985	Socket, socket wrench, 3/4-inch x 1/2-inch drive		X	
41	5120-288-9282	Socket, socket wrench, 5/16-inch x 3/8-inch drive		X	
42	5120-237-0982	Socket, socket wrench, 3/8-inch x 3/8-inch drive			
43	5140-953-0081	Tool box, portable			X
44	5120-269-7971	Universal joint, 1/2-inch		X	
45	5120-264-3795	Wrench, adjustable, open end, 3/4-inch x 6 inches	X		
46	5120-288-9997	Wrench, box, open end, 1/4-inch			X
47	5120-228-9503	Wrench, box, open end, 5/16-inch			X
48	5120-228-9504	Wrench, box, open end, 3/8-inch			X
49	5120-228-9505	Wrench, box, open end, 7/16-inch			X
50	5120-228-9506	Wrench, box, open end, 1/2-inch			X
51	5120-228-9507	Wrench, box, open end, 9/16-inch			X
52	5120-228-9508	Wrench, box, open end, 5/8-inch			X
53	5120-228-9510	Wrench, box, open end, 3/4-inch			X
54	5120-228-9511	Wrench, box, open end, 13/16-inch			X

632-2

See footnote at end of table.

Table 3-1. Tools Required for Maintenance — Continued

Item	Federal stock no. or part no.	Description	TK-101/G	TK-223	TK-225
55	5120-228-9512	Wrench, box, open end, 7/8-inch			X
56	5120-228-9513	Wrench, box, open end, 15/16-inch			X
57	5120-228-9514	Wrench, box, open end, 1-inch			X
58	5120-293-2121	Wrench, open end, 3/16-inch x 1/4-inch			X
59	5120-947-3189	Wrench, open end, 1/2-inch		X	
60	5120-947-3189	Wrench, open end, 1/2-inch x 1/2-inch			X
61	5120-542-5799	Wrench set, socket spinner	X		
62	5120-542-4489	Wrench, torque, 5-150 inch-pounds, 1/4-inch drive	1	1	1

[1]To be assigned to tool kit.

632-3

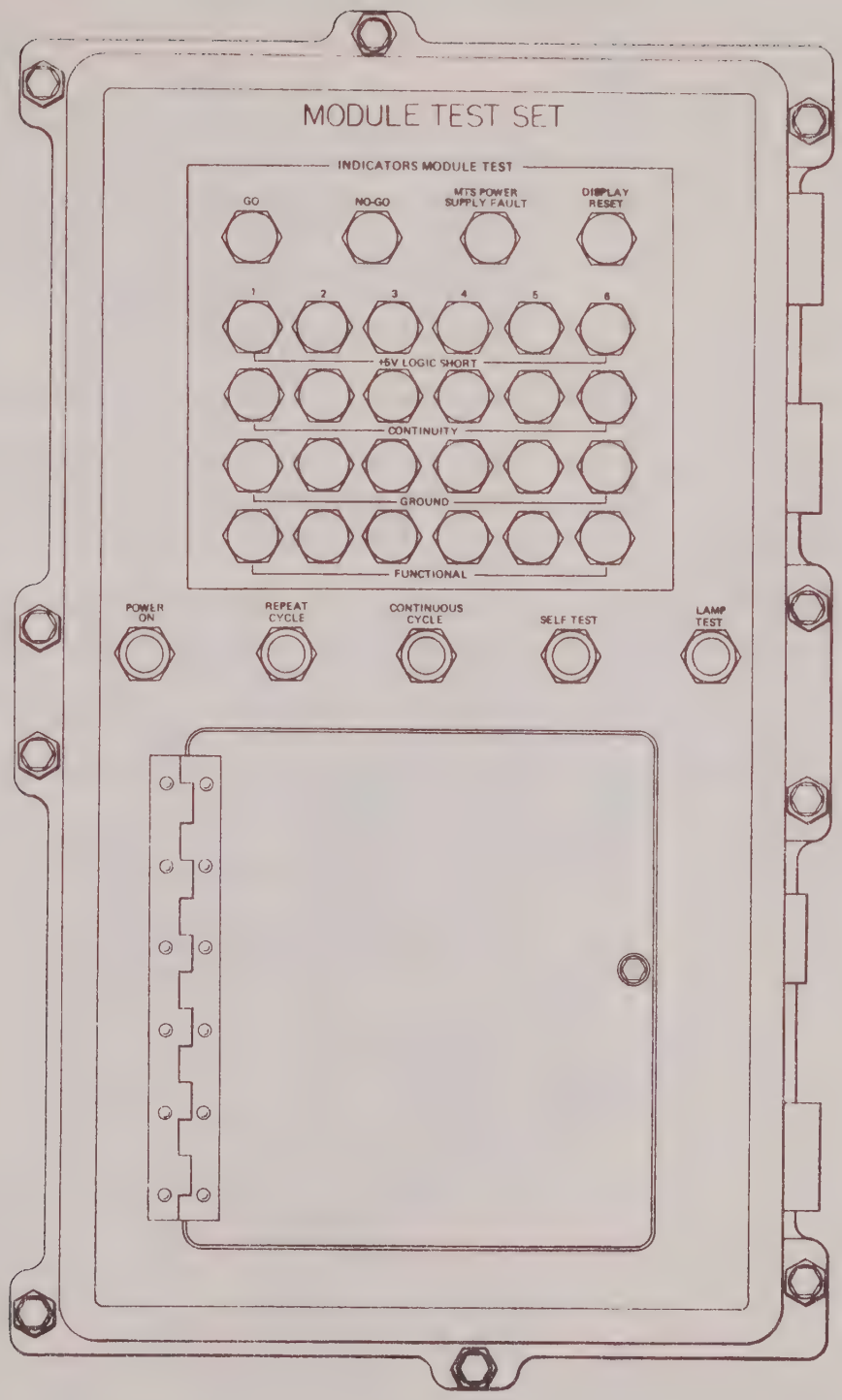

ELOAC010

Figure 3-6. MTS Controls and Indicators

Table 3-2. MTS Controls and Indicators

Control or indicator	Color	Function
GO indicator	Green	Lights during card test and MTS self-test. Stays on at indication of a good test.
NO-GO indicator	Red	Lights during card test and flashes during MTS self-test. Stays on at indication of a bad test.
MTS PWR SUP FAULT	Red	Lights when MTS power supply fails, any of two series regulators fail, or a current overload condition exists.
DISPLAY RESET switch indicator	White	Resets all error display indicators.
+5V LOGIC SHORT Z1-Z6 indicators	Yellow	Lights when signal line is shorted to +5v during card test.
CONTINUITY Z1-Z6 indicators	Yellow	Lights when signal line is open circuited during card test.
GROUND Z1-Z6 indicators	Yellow	Lights when signal line is shorted to ground during card test.
FUNCTIONAL Z1-Z6 indicators	Yellow	Lights when integrated circuit functional logic has failed during card test.
POWER ON switch indicator	Green	Controls MTS power and lights when MTS power is on.
REPEAT CYCLE switch indicator	White	Resets MTS timer when not in continuous cycle and indicates each time timer is reset during continuous cycle.
CONTINUOUS CYCLE switch indicator	White	Controls MTS single or continuous cycle operation. Lights when MTS is operated in continuous mode.
SELF-TEST switch indicator	White	Provides for completion of self test after error is detected and lights at completion of good self test.
LAMP TEST switch indicator	White	Provides for testing all MTS indicators and lights during lamp test.
Test probe indicators (not illustrated)	Green	Duplicates indication of MTS GO indicator.
	Red	Duplicates indication of MTS NO-GO indicator.

633

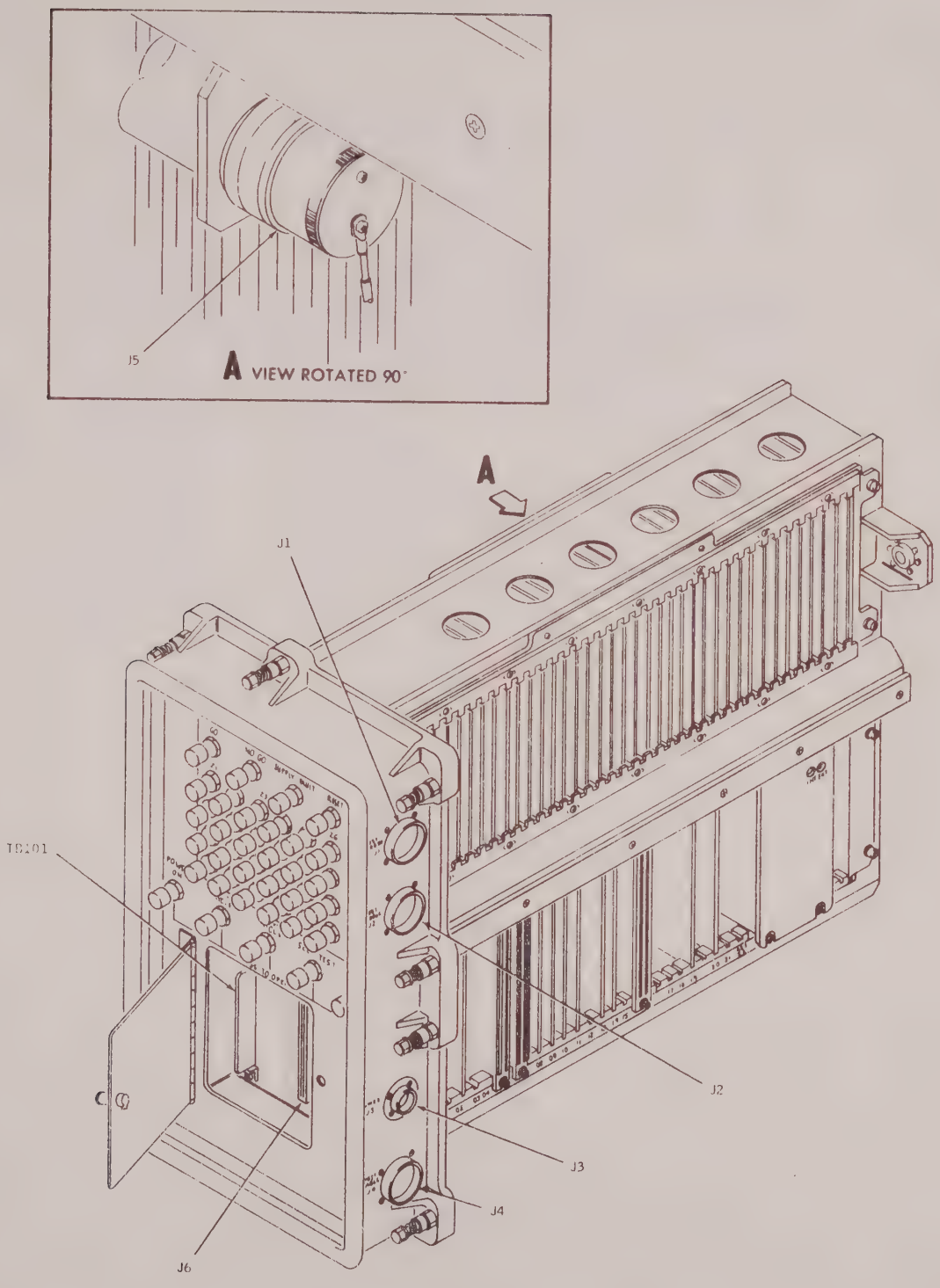

Figure 3-7. MTS Connectors and Terminal Strips

Table 3-3. MTS Connectors and Terminal Strips

Connectors or terminal strips	Function
TEST PROBE J1 and J2	Provides for connection of test probe to MTS.
POWER J3	Provides for connection of power to MTS.
TEST CABLE	
J4	Provides for connection of MTS to unit containing cards to be tested.
J5	Provides for connection of MTS to another MTS to allow testing of MTS cards.
J6	Provides for insertion of single digital card for test out of system unit.
TB101	Provides for connection of test probe when performing self-test.

634

Table 3-4. Materials Supplied

Item	Federal stock no. or part no.	Description	TK-101/G	TK-223	TK-225
1	8305-267-3015	Cheesecloth, cotton			X
2	Commercial	Cleaner, lens, General Cement GS 8890			X
3	8030-022-3196	Compound, insulating			X
4	8030-081-2331	Compound, sealing, type CV, blue			X
5	8030-081-2335	Compound, sealing, yellow			X
6	6850-927-9461	Compound, Dow Corning DC-340			X
7	890902-1 (DSD)	Grease, corrosion, preventive			X
8	MIL-L-6085	Oil, lubricating			X
9	6850-235-0136	Paper, sand			X
10	6850-882-6990	Paste, antistatic			X
11	8030-844-3821	Sealant, liquid-locking, grade A red	1	1	1
12	5970-419-4290	Tape, insulation, electrical			X
13	6810-754-2813	Trichloroethylene			X

[1]To be assigned to tool kit.

635

Table 3-5. Bn Indicator Lamp Matrix

Equipment	Assy per FDC	Lamp part no.	Lamp quantity	
			Per assy	Total
Shelter	1	MS35478-315	5	5
Radio	2	[1]MS25237-327	1	2
CPU	1	865018-10	23	23
IOU	1	865018-10	26	26
MCMU	3	865018-10	4	12
DDT	6	865018-10	2	12
ARMM or MTU	1	865018-10	10	10
DE	2	865018-10	1	2
ACC SPA	1	865018-10	30	30
DPM				
Front panel	1	865018-10	6	6
Reticle	1	MS25231-1829	1	1
Hand controller assembly	1	865018-10	1	1
Plotter flood	3	MS35478-315	2	6
Cover lamp	1	[2]867164-0001	1	1
PCG	1			
Front panel		[1]MS18209-387	9	9
AC main power on		861095-1	1	1
Phase rotation		865069-10	2	2
Power available		867128-0001	3	3
ELP	1	865018-10	3	3
RCMU	2	345	10	20
CCU	1	867168-003	1	1
		867168-002	2	2
		MS15571-1	2	2
		865018-10	3	3
AUX LAMP	2	MS35478-315	1	2
MTS				
Front panel	1	865018-10	31	31
Probe[2]	1	865018-10	2	2

[1]-327 has 1000-hour life, -387 has 25,000-hour life; lamps are otherwise interchangeable.

[2]Replaceable by organizational maintenance.

636

Table 3-6. DivArty Indicator Lamp Matrix

Equipment	Assy per FDC	Lamp part no.	Lamp quantity	
			Per assy	Total
Shelter	2	MS35478-315	5	10
Radio	2	MS25237-327[1]	1	2
CPU	1	865018-10	23	23
IOU	1	865018-10	26	26
MCMU	4	865018-10	4	16
DDT	7	865018-10	2	14
ARMM or MTU	2	865018-10	10	20
DE	2	865018-10	1	2
ACC-SPA	1	865018-10	30	30
DPM				
Front panel	1	865018-10	6	6
Reticle	1	MS25231-1829	1	1
Hand controller assembly	1	865018-10	1	1
Plotter flood	3	MS35478-315	2	6
Cover lamp	1	[2]867164-0001	1	1
PCG	2			
Front panel		[1]MS18209-387	9	18
AC main power on		861095-1	1	2
Phase rotation		865069-10	2	4
Power available		867128-0001	3	6
ELP	2	865018-10	3	6
RCMU	3	345	10	30
CCU	1	867168-003	1	1
		867168-002	2	2
		MS15571-1	2	2
		865018-10	3	3
AUX LAMP[3]	2	MS35478-315	1	2
MTS				
Front panel	1	865018-10	31	31
Probe[2]		865018-10	2	2
ETD	1	865018-10	27	27

[1]-327 has 1000-hour life, -387 has 25,000-hour life; lamps are otherwise interchangeable.

[2]Replaceable by organizational maintenance.

[3]Also used in VFMED and BDU.

637

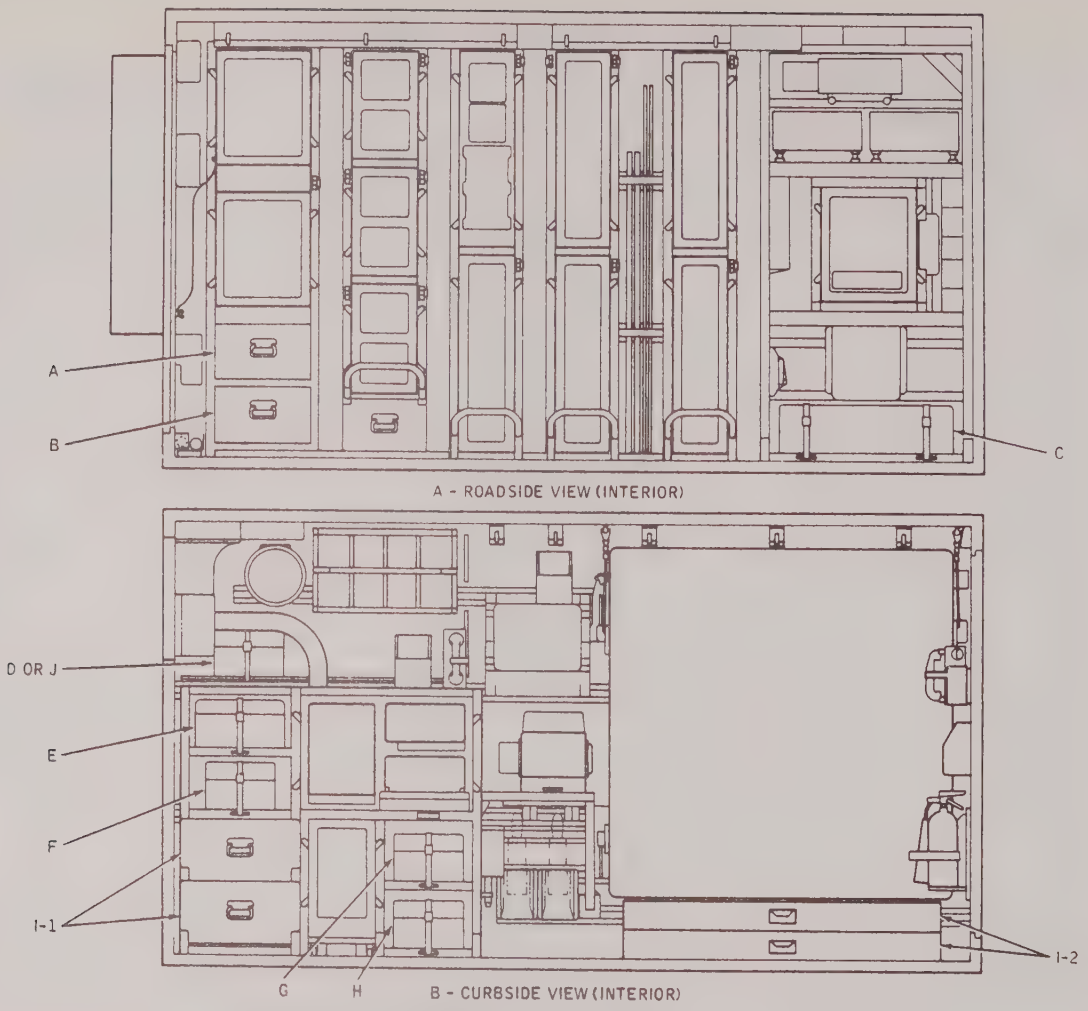

INDEX (CONTAINER LETTER)	DESCRIPTION
A	ELECTRICAL EQUIPMENT A, DRAWER
B	ELECTRICAL EQUIPMENT B, DRAWER
C	MCMU POWER SUPPLY
D	TAPE TRANSPORT CARTRIDGES
E	CCU POWER SUPPLY
F	COMPUTER POWER SUPPLIES
G	DISPLAY POWER SUPPLIES
H	ELP POWER SUPPLY/KEYBOARD
I-1	STORAGE DRAWERS (ELP PAPER)
I-2	STORAGE DRAWERS (DPM PENS, TRACING PLASTIC SHEET, TRACING PAPER)
J	MAGNETIC TAPE CARTRIDGES

NOTE:

CONTAINERS C THRU H AND J INSCRIBED WITH NOMENCLATURE SHOWN IN DESCRIPTION COLUMN.

ELOAC012

Figure 3-8. Bn Computer and Display Group Mission Essential Parts Storage

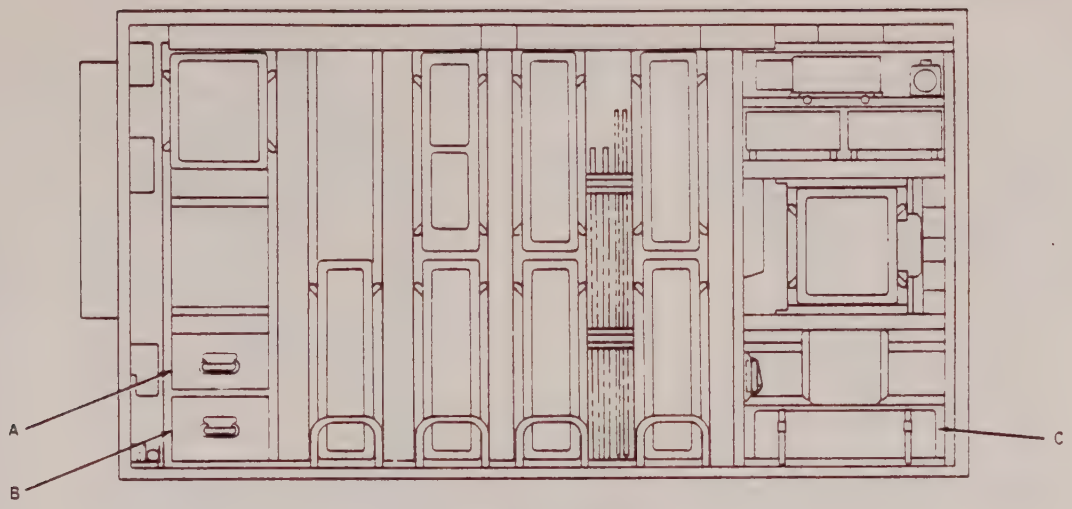

A - ROADSIDE VIEW (INTERIOR)

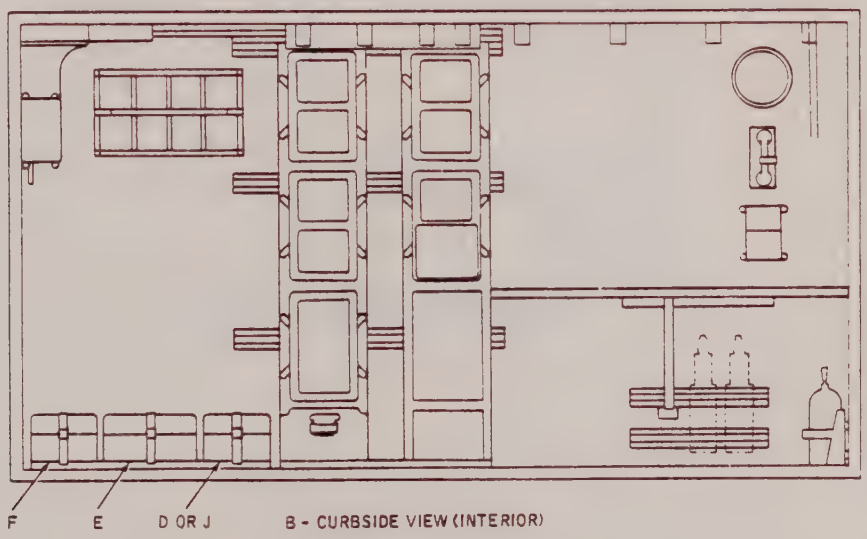

B - CURBSIDE VIEW (INTERIOR)

INDEX (CONTAINER LETTER)	DESCRIPTION
A	ELECTRICAL EQUIPMENT A, DRAWER
B	ELECTRICAL EQUIPMENT B, DRAWER
C	MCMU POWER SUPPLY
D	TAPE TRANSPORT CARTRIDGES
E	CCU POWER SUPPLY
F	COMPUTER POWER SUPPLIES
J	MAGNETIC TAPE CARTRIDGES

NOTE:

CONTAINERS C THRU J INSCRIBED WITH NOMENCLATURE SHOWN IN DESCRIPTION COLUMN.

ELOAC014

Figure 3-9. DivArty Computer Group Mission Essential Parts Storage

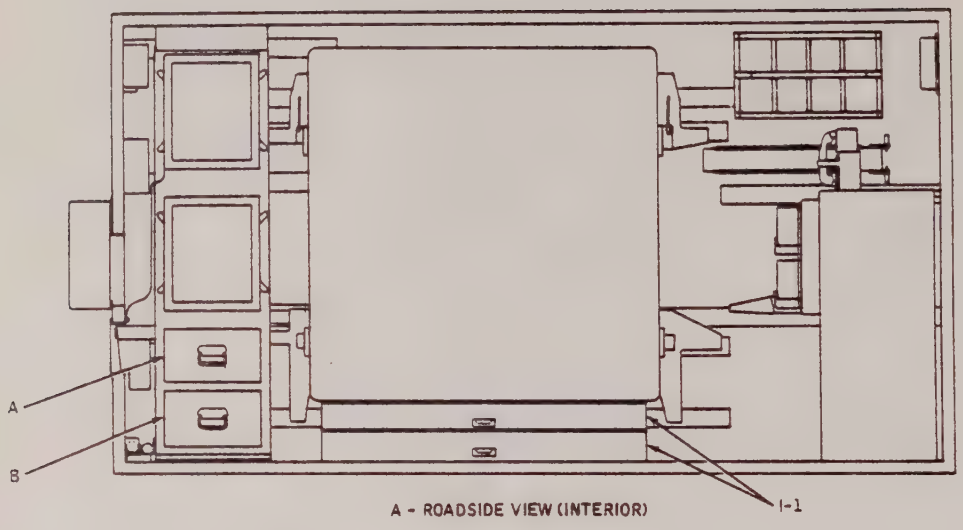

A - ROADSIDE VIEW (INTERIOR)

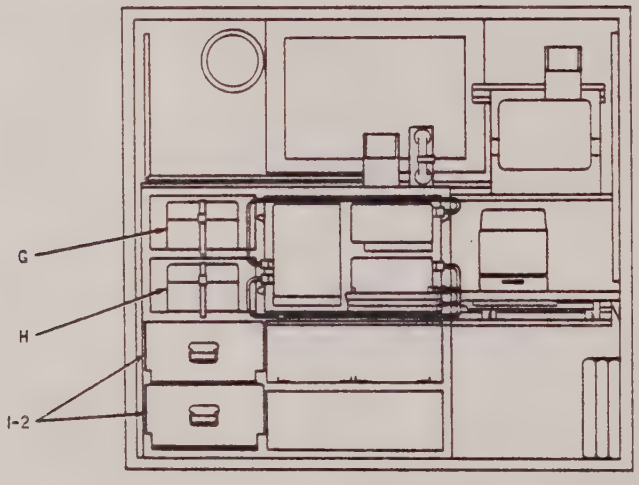

B - FRONT VIEW (INTERIOR)

INDEX (CONTAINER LETTER)	DESCRIPTION
A	ELECTRICAL EQUIPMENT A, DRAWER
B	ELECTRICAL EQUIPMENT B, DRAWER
G	DISPLAY POWER SUPPLIES
H	ELP POWER SUPPLY/KEYBOARD
I-1	STORAGE DRAWERS (DPM PENS, TRACING PLASTIC SHEET, TRACING PAPER)
I-2	STORAGE DRAWERS (ELP PAPER)

NOTE:

CONTAINERS G AND H INSCRIBED WITH NOMENCLATURE SHOWN IN DESCRIPTION COLUMN.

ELOAC018

Figure 3-10. DivArty Display Group Mission Essential Parts Storage

Table 3-7. Mission Essential Parts

Part number	Description	Type	Battalion qty reqd	DivArty Computer qty reqd	DivArty Display qty reqd	Container letter
154400-100	Circuit card assy	Analog	1	1		A
154425-100	Circuit card assy	Analog	1	1		A
591073-100	Circuit card assy	Special	1	1		A
591074-100	Circuit card assy	Analog	1	1		A
591075-100	Circuit card assy	Analog	1	1		A
591076-100	Circuit card assy	Analog	1	1		A
591077-100	Circuit card assy	Analog	1	1		A
591078-100	Circuit card assy	Analog	1	1		A
591079-100	Circuit card assy	Analog	1	1		A
591080-100	Circuit card assy	Analog	1	1		A
591081-100	Circuit card assy	Analog	1	1		A
591082-100	Circuit card assy	Analog	1	1		A
591083-102	Circuit card assy	Analog	1	1		A
591084-100	Circuit card assy	Analog	1	1		A
591085-100	Circuit card assy	Analog	1	1		A
591086-100	Circuit card assy	Analog	1	1		A
591087-100	Circuit card assy	Analog	1	1		A
591089-100	Circuit card assy	Analog	1	1		A
591090-100	Circuit card assy	Special	1	1		A
591091-100	Circuit card assy	Analog	1	1		A
591249-100	Circuit card assy	Analog	1	1		A
591261-100	Circuit card assy	Analog	1	1		A
591264-100	Circuit card assy	Analog	1	1		A
591293-100	Circuit card assy	Analog	1	1		A
126648-100	DC/DC converter assy				1	A
587160-100	Circuit card assy	Analog			1	A
587162-100	Circuit card assy	Analog			1	A
587163-100	Circuit card assy	Analog			1	A
587164-100	Circuit card assy	Analog			1	A
587165-100	Circuit card assy	Analog			1	A
587166-100	Circuit card assy	Analog			1	A
587167-100	Circuit card assy	Analog			1	A
865147-1	Light pen				1	A
MS18209-387[4]	Lamp, incandescent	PCG	2	2	2	A

See footnotes at end of table.

638-1

Table 3-7. Mission Essential Parts – Continued

Part number	Description	Type	Battalion qty reqd	DivArty Computer qty reqd	DivArty Display qty reqd	Container letter
MS25231-1829	Lamp, incandescent	DPM	2		2	A
MS25237-327	Lamp, incandescent	VRC-46	2	2		A
MS35478-315	Lamp, incandescent	DPM/SHLTR AUX LAMP	2	2	2	A
861095-1	Lamp, neon	PCG	2	2	2	A
865018-0010	Lamp, incandescent	FR PNL	30	20	20	A
867164-0001	Lamp, incandescent	DPM COVER	2		2	A
544332-100	Circuit card assy	Digital	1	1		B
544606-100	Circuit card assy	Digital	1	1		B
544607-100	Circuit card assy	Digital	1	1		B
544608-100	Circuit card assy	Digital	1	1		B
544609-100	Circuit card assy	Digital	1	1		B
544623-100	Circuit card assy	Digital	1	1		B
544624-100	Circuit card assy	Digital	1	1		B
544638-100	Circuit card assy	Digital	1	1		B
544651-100	Circuit card assy	Digital	1	1		B
544659-100	Circuit card assy	Digital	1	1		B
587011-100	Circuit card assy	Digital	1	1		B
587012-100	Circuit card assy	Digital	1	1		B
587013-100	Circuit card assy	Digital	1	1		B
587014-100	Circuit card assy	Digital	1	1		B
587015-100	Circuit card assy	Digital	1	1		B
587016-100	Circuit card assy	Digital	1	1		B
587100-102	Circuit card assy	Digital	1	1		B
587101-102[1]	Circuit card assy	Digital	1	1		B
587102-102[1]	Circuit card assy	Digital	2	2		B
587103-102[1]	Circuit card assy	Digital	1	1		B
587104-102[1]	Circuit card assy	Digital	1	1		B
587105-102[1]	Circuit card assy	Digital	1	1		B
587106-102[1]	Circuit card assy	Digital	1	1		B
587107-102	Circuit card assy	Digital	2	2		B

638-2

See footnotes at end of table.

Table 3-7. Mission Essential Parts – Continued

Part number	Description	Type	Battalion qty reqd	DivArty Computer qty reqd	DivArty Display qty reqd	Container letter
587108-102[1]	Circuit card assy	Digital	1	1		B
587109-102[1]	Circuit card assy	Digital	1	1		B
587110-102[1]	Circuit card assy	Digital	1	1		B
587111-10	Circuit card assy	Digital	1	1		B
587112-100	Circuit card assy	Digital	1	1		B
587113-100	Circuit card assy	Digital	1	1		B
587114-100	Circuit card assy	Digital	1	1		B
587116-100	Circuit card assy	Digital	1	1		B
587117-102[1]	Circuit card assy	Digital	1	1		B
587118-100	Circuit card assy	Digital	1	1		B
587119-100	Circuit card assy	Digital	1	1		B
587124-102[1]	Circuit card assy	Digital	1	1		B
587128-100	Circuit card assy	Digital	1	1		B
587130-102[1]	Circuit card assy	Digital	1	1		B
587132-100	Circuit card assy	Analog	1	1		B
587135-100	Circuit card assy	Digital	1	1		B
587136-102[1]	Circuit card assy	Digital	1	1		B
587138-100	Circuit card assy	Digital	1	1		B
587139-100	Circuit card assy	Digital	1	1		B
587143-100	Circuit card assy	Digital	1	1		B
587144-100	Circuit card assy	Analog	1	1		B
587195	PWB, MTS Interface	Digital	1	1		B
587240-100	Circuit card assy	Analog	1	1		B
587241-100	Circuit card assy	Analog	1	1		B
587242-100	Circuit card assy	Analog	1	1		B
587250-100	Circuit card assy	Analog	1	1		B
174051-100	Circuit card assy	ELP	1		1	B
174054-100	Circuit card assy	ELP	1		1	B
174057-100	Circuit card assy	ELP	1		1	B
174060-100	Circuit card assy	ELP	1		1	B
174063-100	Circuit card assy	ELP	1		1	B
174444-100	Circuit card assy	ELP	1		1	B
174069-100	Circuit card assy	ELP	1		1	B

See footnotes at end of table.

638-3

Table 3-7. Mission Essential Parts – Continued

Part number	Description	Type	Battalion qty reqd	DivArty computer qty reqd	DivArty display qty reqd	Container letter
174072-100	Circuit card assy	ELP	1		1	B
174075-100	Circuit card assy	ELP	1		1	B
174078-100	Circuit card assy	ELP	1		1	B
587151-103[2]	Series Regulator assy	Analog	1		1	B
587168-100	Circuit card assy	Analog	1		1	B
587274-100	Circuit card assy	Analog	1		1	B
591093-100	Circuit card assy	Special	1		1	B
591244-100	Circuit card assy	Digital	1		1	B
591244-102	Circuit card assy	Digital	1		1	B
544614-100	Power supply	MCMU	1	1		C
586139-100	Tape transport cartridge		2	2		L
591401	Recorded computer program cartridge (DivArty A)			1		D
591402	Recorded computer program cartridge (DivArty B)			1		D
591403	Recorded computer program cartridge (Battalion A)		1			D
591058-100	Power supply	CCU	1	1		E
126645-100	DC/DC converter as	DDT	1	1		F
126649-1	DC/DC converter assy	IOU	1	1		F
126650-100	DC/DC converter assy	MTS/ETD	1	1		F
126657-100	DC/DC converter assy	ARMM	1	1		F
126646-100	DC/DC converter assy	DPM	1		1	G
126647-100	DC/DC converter assy	DPM	1		1	G
587655-100	DC/DC converter assy	DE/SPA/RDT	1		1	G

638-4

See footnotes at end of table.

Table 3-7. Mission Essential Parts – Continued

Part number	Description	Type	Battalion qty reqd	DivArty Computer qty reqd	DivArty Display qty reqd	Container letter
174327-100	DC/DC converter assy	ELP	1		1	H
588732-100	Keyboard subassembly		1		1	H
594945	Pen, 24 per pkg	DPM	1		1	I
891709	Plastic sheet, tracing	DPM	1		1	I
891710	Paper, tracing	DPM	1		1	I
4000063-1[3]	Paper, printer, 2 per pkg	ELP	2		3	I
595862	Pen, clip	DPM	1		1	I

[1]-102 circuit cards are preferred: -100 may be substituted.

[2]-103 circuit cards are preferred: -100 may be substituted.

[3]-Manufacturer code ident: 25549.

[4]-MS 18209-387 Lamp is preferred: -327 may be substituted.

638-5

Table 3-7A. Mission Essential Parts (Systems with MTUs)

Part number	Description	Type	Battalion qty reqd	DivArty Computer qty reqd	DivArty Display qty reqd	Container letter
154400-100	Circuit card assy	Analog	1	1		A
154425-100	Circuit card assy	Analog	1	1		A
591074-100	Circuit card assy	Analog	1	1		A
591075-100	Circuit card assy	Analog	1	1		A
591076-100	Circuit card assy	Analog	1	1		A
591077-100	Circuit card assy	Analog	1	1		A
591078-100	Circuit card assy	Analog	1	1		A
591079-100	Circuit card assy	Analog	1	1		A
591080-100	Circuit card assy	Analog	1	1		A
591081-100	Circuit card assy	Analog	1	1		A
591082-100	Circuit card assy	Analog	1	1		A
591083-102	Circuit card assy	Analog	1	1		A
591084-100	Circuit card assy	Analog	1	1		A
591085-100	Circuit card assy	Analog	1	1		A
591086-100	Circuit card assy	Analog	1	1		A
591087-100	Circuit card assy	Analog	1	1		A
591089-100	Circuit card assy	Analog	1	1		A
591091-100	Circuit card assy	Analog	1	1		A
591249-100	Circuit card assy	Analog	1	1		A
591261-100	Circuit card assy	Analog	1	1		A
591264-100	Circuit card assy	Analog	1	1		A
591293-100	Circuit card assy	Analog	1	1		A
126648-100	DC/DC converter assy				1	A
587160-100	Circuit card assy	Analog			1	A
587162-100	Circuit card assy	Analog			1	A
587163-100	Circuit card assy	Analog			1	A
587164-100	Circuit card assy	Analog			1	A
587165-100	Circuit card assy	Analog			1	A
587166-100	Circuit card assy	Analog			1	A
587167-100	Circuit card assy	Analog			1	A
865147-1	Light pen				1	A
MS18209-387[6]	Lamp, incandescent	PCG	2	2	2	A

See footnotes at end of table.

741-1

Table 3-7A. Mission Essential Parts (Systems with MTUs) – Continued

Part number	Description	Type	Battalion qty reqd	DivArty Computer qty reqd	DivArty Display qty reqd	Container letter
MS25231-1829	Lamp, incandescent	DPM	2		2	A
MS25237-327	Lamp, incandescent	VRC-46	2	2		A
MS35478-315	Lamp, incandescent	DPM/SHLTR AUX LAMP	2	2	2	A
861095-1	Lamp, neon	PCG	2	2	2	A
865018-0010	Lamp, incandescent	FR PNL	30	20	20	A
867164-0001	Lamp, incandescent	DPM COVER	2		2	A
544332-100	Circuit card assy	Digital	1	1		B
544606-100	Circuit card assy	Digital	1	1		B
544607-100	Circuit card assy	Digital	1	1		B
544608-100	Circuit card assy	Digital	1	1		B
544609-100	Circuit card assy	Digital	1	1		B
544623-100	Circuit card assy	Digital	1	1		B
544624-100	Circuit card assy	Digital	1	1		B
544638-100	Circuit card assy	Digital	1	1		B
544651-100	Circuit card assy	Digital	1	1		B
544659-100	Circuit card assy	Digital	1	1		B
587011-100	Circuit card assy	Digital	1	1		B
587012-100	Circuit card assy	Digital	1	1		B
587013-100	Circuit card assy	Digital	1	1		B
587014-100	Circuit card assy	Digital	1	1		B
587015-100	Circuit card assy	Digital	1	1		B
587016-100	Circuit card assy	Digital	1	1		B
587100-102	Circuit card assy	Digital	1	1		B
587101-102[1]	Circuit card assy	Digital	1	1		B
587102-102[1]	Circuit card assy	Digital	2	2		B
587103-102[1]	Circuit card assy	Digital	1	1		B
587104-102[1]	Circuit card assy	Digital	1	1		B
587105-102[1]	Circuit card assy	Digital	1	1		B
587106-102[1]	Circuit card assy	Digital	1	1		B
587107-102	Circuit card assy	Digital	2	2		B

741-2

See footnotes at end of table.

Table 3-7A. Mission Essential Parts (Systems with MTUs) – Continued

Part number	Description	Type	Battalion qty reqd	DivArty Computer qty reqd	DivArty Display qty reqd	Container letter
587108-102[1]	Circuit card assy	Digital	1	1		B
587109-102[1]	Circuit card assy	Digital	1	1		B
587110-102[1]	Circuit card assy	Digital	1	1		B
587111-100	Circuit card assy	Digital	1	1		B
587112-100	Circuit card assy	Digital	1	1		B
587113-100	Circuit card assy	Digital	1	1		B
587114-100	Circuit card assy	Digital	1	1		B
587116-100	Circuit card assy	Digital	1	1		B
587117-102[1]	Circuit card assy	Digital	1	1		B
587118-100	Circuit card assy	Digital	1	1		B
587119-100	Circuit card assy	Digital	1	1		B
587124-102[1]	Circuit card assy	Digital	1	1		B
587128-100	Circuit card assy	Digital	1	1		B
587130-102[1]	Circuit card assy	Digital	1	1		B
587132-100	Circuit card assy	Analog	1	1		B
587135-100	Circuit card assy	Digital	1	1		B
587136-102[1]	Circuit card assy	Digital	1	1		B
587139-100	Circuit card assy	Digital	1	1		B
587143-100	Circuit card assy	Digital	1	1		B
587144-100	Circuit card assy	Analog	1	1		B
587195	PWB, MTS Interface	Digital	1	1		B
174051-100	Circuit card assy	ELP	1		1	B
174054-100	Circuit card assy	ELP	1		1	B
174057-100	Circuit card assy	ELP	1		1	B
174060-100	Circuit card assy	ELP	1		1	B
174063-100	Circuit card assy	ELP	1		1	B
174444-100	Circuit card assy	ELP	1		1	B
174069-100	Circuit card assy	ELP	1		1	B
174072-100	Circuit card assy	ELP	1		1	B
174075-100	Circuit card assy	ELP	1		1	B
174078-100	Circuit card assy	ELP	1		1	B
587151-103[2]	Series Regulator assy	Analog	1		1	B
587168-100	Circuit card assy	Analog	1		1	B

See footnotes at end of table

741-3

Table 3-7A. Mission Essential Parts (Systems with MTUs) – Continued

Part number	Description	Type	Battalion qty reqd	DivArty Computer qty reqd	DivArty Display qty reqd	Container letter
587274-100	Circuit card assy	Analog	1		1	B
591093-100	Circuit card assy	Special	1		1	B
591244-100	Circuit card assy	Digital	1		1	B
591244-102	Circuit card assy	Digital	1		1	B
10285211-1[3]	Magnetic tape transport (MTT)		1	1		B
464-9201-1[4]	Circuit card assy	MTT	1	1		B
465-9001-1[4]	Circuit card assy	MTT	1	1		B
467-9201-1[4]	Circuit card assy	MTT	1	1		B
544614-100	Power supply	MCMU	1	1		C
494-9001-1[4]	Magnetic tape cartridge (MTC)		1	1		J
494-9037-1[4]	MTC carrying case		1	1		J
591058-100	Power supply	CCU	1	1		E
126645-100	DC/DC converter assy	DDT	1	1		F
126649-101	DC/DC converter assy	IOU	1	1		F
126650-100	DC/DC converter assy	MTS/ETD	1	1		F
126677-100	DC/DC converter assy	MTU	1	1		F
126646-100	DC/DC converter assy	DPM	1		1	G
126647-100	DC/DC converter assy	DPM	1		1	G
587655-102	DC/DC converter assy	DE/SPA/RDT	1		1	G
174327-100	DC/DC converter assy	ELP	1		1	H
588732-100	Keyboard subassembly		1		1	H
594945	Pen, 24 per pkg	DPM	2		2	I
891709	Plastic sheet, tracing	DPM	1		1	I

ee footnotes at end of table

741-4

Table 3-7A. Mission Essential Parts (Systems with MTUs) – Continued

Part number	Description	Type	Battalion qty reqd	DivArty Computer qty reqd	DivArty Display qty reqd	Container letter
891710	Paper, tracing	DPM	1		1	I
4000063-1[5]	Paper, printer, 2 per pkg	ELP	2		3	I
595862	Pen, clip	DPM	1		1	I

741-5

[1]-102 circuit cards are preferred: -100 may be substituted.

[2]-103 circuit cards are preferred: -100 may be substituted.

[3]Manufacturer code ident: 18876. Storage space for the MTT is provided; however, the MTT is replaceable only by DS maintenance or higher echelon.

[4]Manufacturer code ident: 96682.

[5]Manufacturer code ident: 25549.

[6]MS18209-387 lamp is preferred: -327 may be substituted.

Section IV. REPAINTING AND REFINISHING

3-18. Introduction. The FDC shelters and equipment should be inspected periodically to determine any need for repainting and refinishing. The finished surfaces should be inspected for cracking, crazing, chips, scratches, flaking, corrosion, pitting or other damage. If the inspection reveals any damage that can be corrected by minor touch up (within the limits of organizational maintenance), refer to the paragraphs below. If any corrosion is observed or if repainting and refinishing requirements are extensive, then depot corrective action is required. Before refinishing, the affected surfaces must be cleaned of dirt, grease, fungus, moisture, or any other contaminating agent that might interfere with the application or adhesion of the finish. Obtain required materials, indicated in any of the following paragraphs, from organic supplies.

NOTE

The procedure specified in paragraph 3-19 below corresponds to finish number P513 of specification MIL-F-14072.

3-19. Surface Preparation. Prior to application of any finish, the affected surfaces must be prepared in accordance with the following procedure. Surface preparation must be done immediately before the finishing operation or suitable precautions taken to ensure cleanliness during the period between preparation and finishing. The surface to be refinished must be cleaned thoroughly for good finish adhesion.

a. *Masking.* Plated or base metal parts containing areas specifically intended for electrical contact or heat transfer shall be masked or otherwise protected during the refinishing procedure. Unless otherwise specified, fabrics, plastics, rubber, and working parts of machinery must also be masked. If masking tape is used for this purpose, it must be of electrical grade.

b. *Preparatory Cleaning.* Remove any grease, oil, or other surface contaminants using detergent and water. Clean off any detergent residue with a clear water rinse. Remove any minor pitting or scratches using fine sandpaper. Rinse with clear water to remove any particles from sanding. Dry surfaces with a clean, lint-free cloth and, if necessary, use a vacuum cleaner to get moisture out of crevices and seams.

c. *Touchup Surface Treatment.* If the surface being repainted or refinished has suffered surface treatment damage, it should be retreated with material conforming to specification MIL-C-5541. Surface retreatment should be accomplished, preferably, within 8 hours, but not more than 72 hours prior to application of the finish. After retreating, rinse surface with water and test retreated area with a clean, white cloth wet with distilled water. If cloth shows stains, continue wiping surface with clean white cloths wet with distilled water until surface is completely clean.

3-20. Surface Coating. After surface preparation, coat the surface in accordance with the following paragraphs.

a. *Pretreatment Coating.* Pretreatment coatings (wash primer) conforming to MIL-P-15328 should be blended and applied as specified in MIL-C-8507. Discard any mixed wash-primer after the mixture is

eight hours old. Drying time for the wash primer ranges from 30 minutes to four hours. Readiness for recoating can be determined by checking whether wash-primer coating is capable of resisting removal by scraping with fingernail. Start checking after 30 minutes, and proceed with topcoating as soon as film resists scratching. Next coat in the sequence should be applied within four hours to assure good adhesion.

NOTE

Both interior and exterior surfaces of components normally housed inside enclosures such as shelters, are considered interior surfaces, and as such do not require pretreatment coating. This exemption does not apply to corrosion resistant steels, nickel, and copper based alloys, and most platings such as cadmium, zinc, or chromium. Such surfaces must always receive pretreatment coating if they are to be painted. Refer to table 3-8 for specific requirements of each equipment.

b. *Prime Coat.* Prime surface under repair with one coat of zinc chromate primer, conforming to MIL-P-8585, and air-dry.

CAUTION

Wash primer may not be top coated directly with lacquer without an intervening primer coat, since poor adhesion, or poor corrosion resistance, or both will result.

c. *Top Coats.* The first finish coat of enamel should be applied after the zinc chromate primer has dried (one hour minimum). If the surface being repainted is an exterior surface, it should receive the first finish coat within 24 hours of priming. If it is an interior surface, it should receive the first finish coat within 72 hours after application of the primer. Refer to table 3-8 to determine the proper paint type and color for refinishing a particular surface. Refer to TB 746-10 for detailed instructions concerning field touchup of painted surfaces. Refer to maintenance instructions in TM 9-213 for painting equipment.

CAUTION

Do not paint functional, working, or wearing surfaces, threads of adjustment screws, oil holes, or other parts and surfaces where the application could cause improper installation or malfunction of the part or assembly. Do not paint parts or surfaces in direct contact with fluids such as fuel, oil, hydraulic fluid, etc. Do not paint parts or surfaces housed in contact with or permanently coated with grease, oil, or other lubricants. Unless required to match specified color schemes or by the applicable drawing, do not paint nonmetallic materials such as rubber, plastic, insulating materials, fabrics, etc. Do not paint bonding contact-areas of metal components.

Table 3-8. Equipment Finishes

Equipment nomenclature	Surface preparation MIL-F-14072 finish number	Final paint film	Final paint film color per FED-STD-595
		Shelter	
Exterior	P513U with pretreatment	TT-E-516, 1 coat followed by MIL-E-46061	(37875, lustreless white) lustreless green enamel
Exit door interior	P513U with pretreatment	TT-E-516, 1 coat followed by MIL-E-46061	(37875, lustreless white) lustreless green enamel
Interior	P513	TT-E-529, 2 coats	24533, semigloss green
Floor	Applied over previous finish. Clean per para. 3-19b.	MIL-W-5044 Type I	36231, dark gull gray
		Assemblies	
Front panels	P513, with pretreatment	TT-E-529, 2 coats	X24087, semigloss olive drab
Castings	P513, with pretreatment	TT-E-529, 2 coats	X24087, semigloss olive drab
Drawn cans	P513, with pretreatment	TT-E-529, 2 coats	X24087, semigloss olive drab
Handles	P513, with pretreatment	TT-E-529, 2 coats	X24087, semigloss olive drab
Transit case exterior	P513, with pretreatment	TT-E-529, 2 coats	X24087, semigloss olive drab
Transit case cover	P513, with pretreatment	TT-E-529, 2 coats	X24087, semigloss olive drab
AN/E keyboard case	P513, with pretreatment	TT-E-529, 2 coats	X24087, semigloss olive drab
Panel lettering	N/A – applied over previous finish	Fill with TT-E-527	37875, lustreless white
Transit case interior	P513	TT-E-529, 1 coat	X24087, semigloss olive drab
DPM plot board	MIL-A-8625 type II, class 1	None	
General unit interiors	Chromate conversion coating per MIL-C-5541 class 1, 2, or 3 as required	None	N/A

639-1

Table 3-8. Equipment Finishes – Continued

Equipment nomenclature	Surface preparation MIL-F-14072 finish number	Final paint film	Final paint film color per FED-STD-595
Connector color coding	N/A – applied over previous finish	TT-E-527, 2 coats	31136, lustreless red 34108, lustreless green 32246, lustreless orange 33538, lustreless yellow
Panel lettering	N/A – applied over previous finish	Fill with TT-E-527	37038, lustreless black
Write-on patches	N/A – applied over previous finish	TT-E-529, 2 coats	27875, semigloss white

639-2

Section V. PREVENTIVE MAINTENANCE CHECKS AND SERVICES

3-21. Introduction. To ensure that the FDC equipment is always ready for operation, it must be inspected systematically so that faults may be discovered and corrected before they result in serious damage or failures. The necessary preventive maintenance is performed at daily, weekly, monthly, and quarterly intervals. The daily and weekly preventive maintenance procedures are performed by the operator, as described in the Bn and DivArty operators' manuals. The monthly procedures are listed in table 3-9 and the quarterly procedures in table 3-10. All faults and corrective actions should be recorded on the applicable form.

3-22. General. Periodic maintenance checks will at times indicate the need for cleaning the FDC equipment. The internal and external surfaces of the major units and assemblies must be kept free of moisture, dirt, grease, fungus, or any other contaminating agent. Clean the external surface of the FDC equipment as instructed in the operator's manual. Clean the internal surfaces as described in the following paragraph. For additional instructions concerning inspection and cleaning, refer to section VI.

3-23. Cleaning Internal Surfaces. At quarterly intervals, clean the internal surfaces of the FDC equipment as follows:

WARNING

Do not attempt to clean the interior of a major assembly without first turning off the operating power to the assembly; set the related, equipment power control to the off position, and then set the respective PCG switch to the off (down) position (table 3-11). For BDU and VFMED, turn off the MAIN POWER switch on the power distribution box.

CAUTION

When cleaning the internal surfaces of a major assembly, exercise caution to prevent any foreign matter from lodging into critical areas (connectors, between card assemblies, etc.) of the major assembly.

a. With a soft bristle brush and/or vacuum cleaner, remove dust or dirt from exposed electrical connections.

WARNING

The fumes of trichloroethylene are toxic. Provide thorough ventilation whenever it is used. DO NOT USE NEAR AN OPEN FLAME. Trichloroethylene is not flammable, but exposure of the fumes to an open flame or to hot metal forms highly toxic phosgene gas.

Table 3-9. Monthly Organizational Preventive Maintenance Checks and Service

M – Monthly

Total man-hours required: 0.5

Sequence number	Item to be inspected, and procedure	Work time (M/H)
[1]1	ETD inlet and exhaust filter.	
	Remove filters when dirt is visible on external surface and clean thoroughly with trichloroethane. Provide adequate ventilation. Shake to remove excess cleaner (refer to paragraph 3-24).	0.2
2	ELP assembly.	
	Extend chassis and clean as required (refer to chapter 3 of either TM 11-7440-240-10 or TM 11-7440-241-10).	0.2
3	Check all belts for elasticity by gently pulling on each belt. Firm resistance to stretching should be noticed; belt should quickly return to original configuration when released with little or no stretching actually occurring. Excessive stretching or hesitancy in returning to original configuration indicates worn or defective belt.	0.1

[1]Applicable to DivArty FDC only.

640

Table 3-10. Quarterly Organizational Preventive Maintenance Checks and Service

Q – Quarterly

Total man-hours required: 1.31 (per unit)

Sequence number	Item to be inspected, and procedure	Work time (M/H)
	GENERAL	
1	Slide assemblies	
	Extend major assemblies out of their respective case assemblies; check for binding or scraping. Check general condition of all slide assemblies. Check lock devices for wear or other defects. Be sure that all major assemblies can be locked in two directions. (Refer to paragraph 3-45a for procedure for extending units.)	0.2 (per unit)
2	Card cages	
	Inspect card cages for proper card seating and card retainers in locked position (paragraph 3-46b). Check for damaged parts, and for binding and other obvious defects. Remove all dirt, grease, moisture, or other contaminants from card cages (paragraph 3-23).	0.5 (per unit)
3	Chassis	
	Inspect chassis for damaged parts, and for binding, scraping, and other obvious defects. Remove dirt, grease, moisture, or other contaminants from chassis (paragraph 3-23).	0.3 (per unit)
4	Elapsed time meters	
	Inspect elapsed time meters for proper operation (paragraph 3-25) or for evidence of physical damage.	0.01 (per unit)
5	Case assembly	
	Remove all dirt, grease, moisture, and other contaminants from internal walls of case (paragraph 3-23). Return extended major assembly to its normal installed position (paragraph 3-45b) while checking slide assembly operation. Report any binding or scraping to direct support.	0.3 (per (unit)

641

Table 3-11. PCG Switches Versus Major Assembly

Major assy	Bn AC PRIME POWER 270 VDC	Bn AC OR DC PRIME PWR 28 VDC	Bn DC PRIME PWR 270 VDC	DivArty AC PRIME POWER 270 VDC	DivArty AC OR DC PRIME PWR 28 VDC	DivArty DC PRIME PWR 270 VDC
					Computer group	
AN/VRC-46(1)		(J9) EMER			(J9) EMER	
AN/VRC-46(2)		(J9) EMER			(J9) EMER	
ARMM-1 or MTU-1	(J2)	(J1-J4)	(J2)	(J2)	(J1-J4)	(J2)
ARMM-2 or MTU-2				(J2)	(J1-J4)	(J2)
DDT A		(J7)			(J7)	
DDT B		(J7)			(J7)	
DDT C		(J7)			(J7)	
DDT D		(J7)			(J7)	
DDT E		(J7)			(J7)	
DDT F		(J7)			(J7)	
DDT G					(J7)	
IOU	(J1)	(J1-J4)	(J1)	(J1)	(J1-J4)	(J1)
KG-30				(J1)	(J1-J4)	(J1)
KG-31	(J1)	(J1-J4)	(J1)			
MTS	(J3)	(J1-J4)	(J3)	(J2)	(J1-J4)	(J2)
MCMU A	(J3)	(J1-J4)	(J3)	(J3)	(J1-J4)	(J3)
MCMU B	(J4)	(J1-J4)	(J4)	(J3)	(J1-J4)	(J3)
MCMU C	(J4)	(J1-J4)	(J4)	(J4)	(J1-J4)	(J4)
MCMU D				(J4)	(J1-J4)	(J4)
					Display group	
ACC		(J5)			(J5)	
DCU	(J2)	(J1-J4)	(J2)	(J2)	(J1-J4)	(J2)
DPU		(J8)			(J8)	
ELP 1		(J6)			(J7)	
ELP 2					(J6)	
ETD				(J4)	(J1-J4)	(J4)
MTS		(see MTS above)		(J3)	(J1-J4)	(J3)
CCU		(J16) EMER			(J16) EMER	

NOTE: CCU power controlled by (J16) EMER is powered by 28 VDC but is located outside the AC or DC PRIME PWR 28 VDC area.

642

b. Remove grease, fungus, and ground-in dirt from unpainted metallic surfaces using a lint-free cleaning cloth slightly moistened with cleaning compound.

c. Inspect interior of case assembly. Clean as required with a clean, dry, soft, lint-free cloth.

3-24. Inspecting and Cleaning ETD Inlet and Exhaust Filters (DivArty FDC Only). The ETD inlet filter should be inspected daily for dirt. When dirt is seen on external surface of filter, remove filter (refer to chapter 15) and clean thoroughly using trichloroethane (FSN 6810-664-273). Provide adequate ventilation. Shake to remove excess cleaner. The exhaust filters should be removed (see chapter 15) and cleaned thoroughly on a monthly basis.

3-25. Inspecting Elapsed-Time Meters. Elapsed-time indicators that measure equipment-on time are provided for all major assemblies. The measured elapsed time may be used in completing maintenance request forms, in logkeeping, and in determining the need for scheduled maintenance. Two types of indicators are provided: electromechanical and electrochemical.

a. *Electromechanical.* An electromechanical indicator is used in the PCG, and provides an accurate measurement of system-on time. Time is displayed on a digital readout. An electromechanical time meter is also used on the MTT. Elapsed time displayed (0000 to 9999) indicates total hours of power to the capstan motor.

b. *Electrochemical.* This type of indicator, which is read like a thermometer, is used on major assemblies (except the PCG) and provides an indication of approximate equipment-on time. Two ranges of this type of indicator are used: 0-to-10,000 hours and 0-to-1,000 hours. The TTC is the only equipment that uses the 0-to-1,000 hour indicator. The 0-to-1,000 hour indicator is graduated in 50-hour increments; the 0 to 10,000 hour indicator is graduated in 500-hour increments.

3-26. Inspecting the MTS. In addition to the general procedures in the preceding paragraphs, inspect and clean the specific areas of the MTS as follows:

WARNING

To eliminate shock hazard when servicing the MTS, turn off power to the MTS by pressing the POWER ON switch to turn off the indicator and then setting the appropriate PCG switches to their off position (down). Refer to table 3-16.

a. Check that all switches and mechanical parts are secure, operable, and undamaged.

b. Inspect all MTS connectors, self-test terminal strip TB101, test probe, test probe connectors, and test cable connectors. Request direct support maintenance assistance to replace any authorized damaged components. If foreign matter is present, clean equipment as follows:

(1) Clean front and external surfaces using a soft cloth and water or mild detergent.

(2) Clean internal surfaces using vacuum cleaner and soft bristle brush.

3-27. ELP Cleaning Procedure. The ELP requires cleaning after each 8 hours of system operation and whenever excessive paper dust is observed during paper load. Refer to chapter 3 of either TM 11-7440-240-10 or TM 11-7440-241-10 for ELP cleaning procedures.

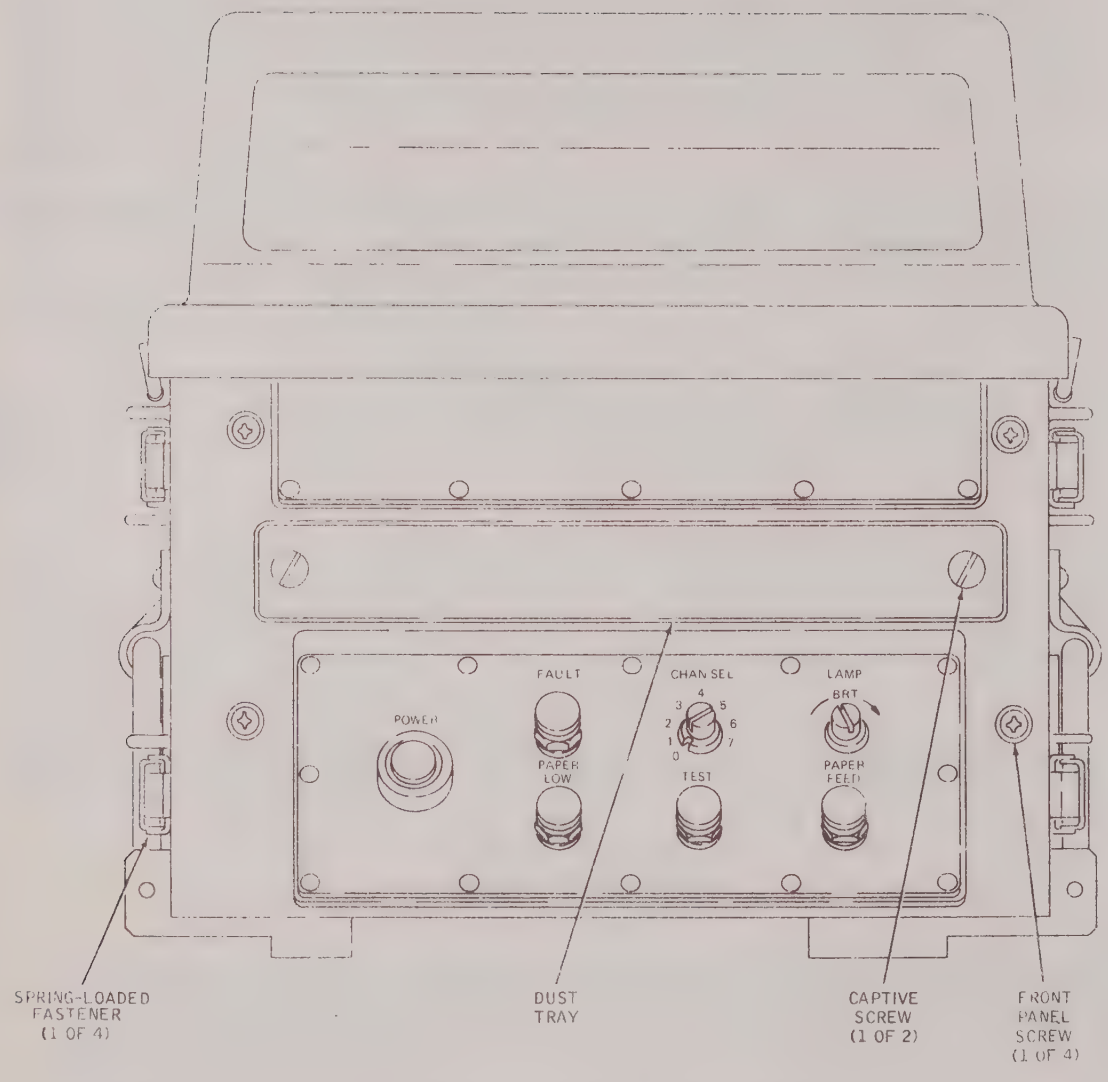

Figure 3-11. ELP Interior Access Hardware

Section VI. GENERAL MAINTENANCE PROCEDURES

3-28. Introduction. Organizational corrective maintenance consists of isolating unit failures to a replaceable circuit card or module and repairing the unit by removal and replacement of the faulty subassembly. The scope of organizational maintenance is limited by the authorized repair parts, tools, and test equipment. Refer to table 3-7 for the MEP inventory list and to appendix B for the MAC. An overall explanation of organizational maintenance procedures is given in the following paragraphs. The flow chart of figure 3-12 shows how a malfunction is isolated and repaired.

3-29. Fault Identification. The first organizational maintenance task is fault identification. Review the operator's troubleshooting tests and test results to identify the fault and faulty unit. If the operator troubleshooting test-results identify the faulty unit, proceed to fault isolation. If the faulty unit is not conclusively identified, the first organizational maintenance task is to localize the fault to a unit as indicated in the following paragraphs.

a. *FDC.* To localize a fault to a unit within the FDC, perform the following steps:

(1) Repeat operator's maintenance procedures using appropriate operator's maintenance manual.

(2) If fault still not localized to a unit, request direct support maintenance assistance.

b. *Remote Unit.* To localize a fault to a unit within a BDU or VFMED, perform the following steps:

(1) Repeat operator's maintenance procedures using appropriate operator's maintenance manual.

(2) Extend all major assemblies from their cases. Inspect for obvious damage, loose circuit cards and connectors, converter fault lamps lighted, and other internal fault indications such as series regulator or power control card lamps lighted.

(3) If fault still not localized to a unit, request direct support maintenance assistance.

(4) If direct support maintenance assistance is not immediately available, organizational maintenance man may attempt to find fault. Return to FDC and test all digital cards in each unit with FDC MTS. Check all analog cards in each unit by substitution (refer to section VII).

3-30. Fault Isolation. When the fault is localized to a unit, check for obvious indications of the fault (e.g., power fault indicator lit). If no obvious fault indications exist, determine if a maintenance and diagnostic fault isolation (M&D FI) program can be run. If not, refer to the appropriate unit-level section of this manual for fault isolation procedures. If an M&D FI program can be run, a fault isolation message will be printed on the ELP and displayed on the CPU DIAGNOSE STATUS indicators. Refer to the operator's manual for M&D FI procedures. Using the displayed message, the organizational maintenance man performs the actions indicated in the fault catalog.

3-31. Repair. Repairs are accomplished by replacing the faulty card(s) or modules and are verified by rerunning the FI program.

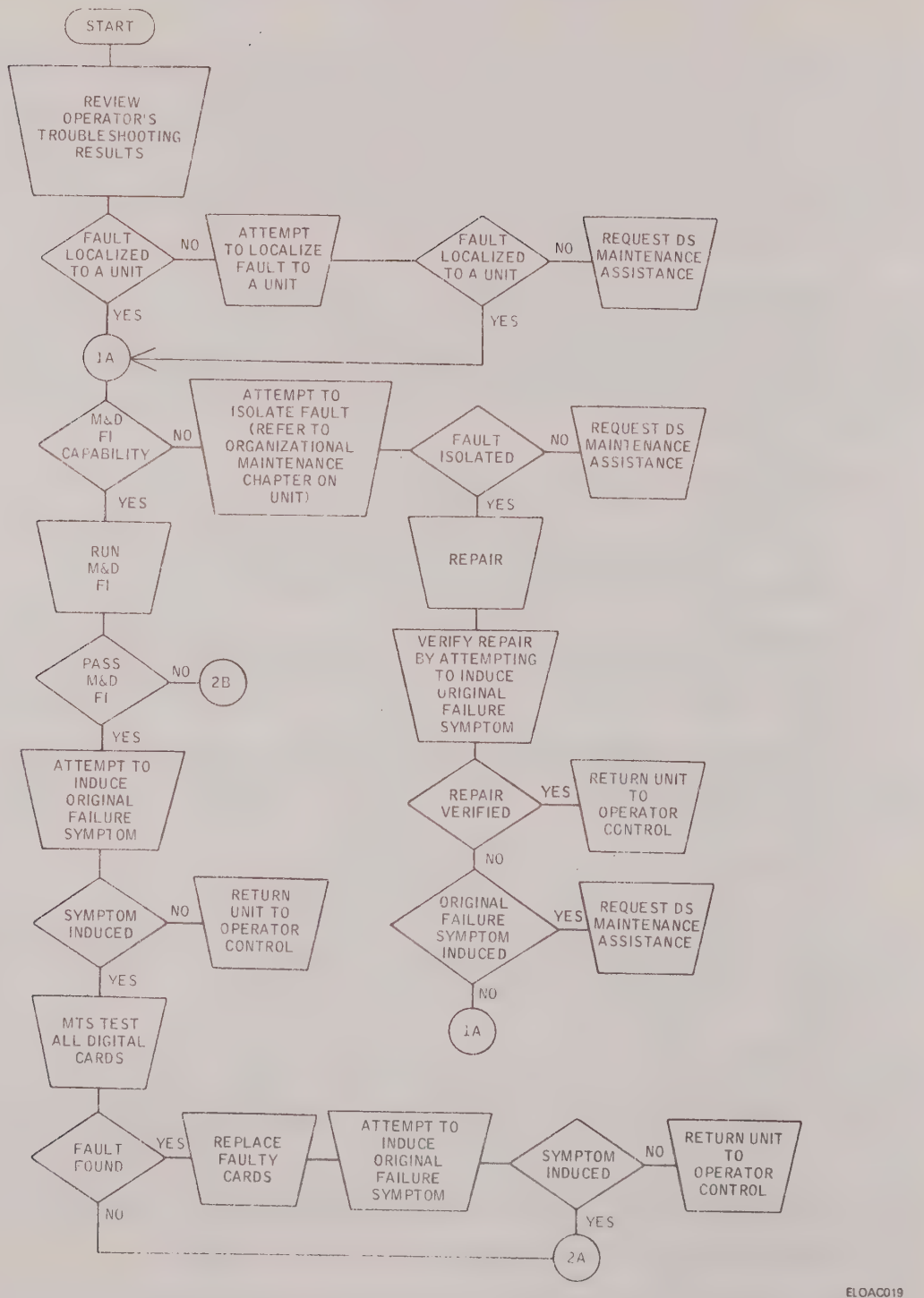

Figure 3-12. Maintenance Task Flow (Sheet 1 of 2)

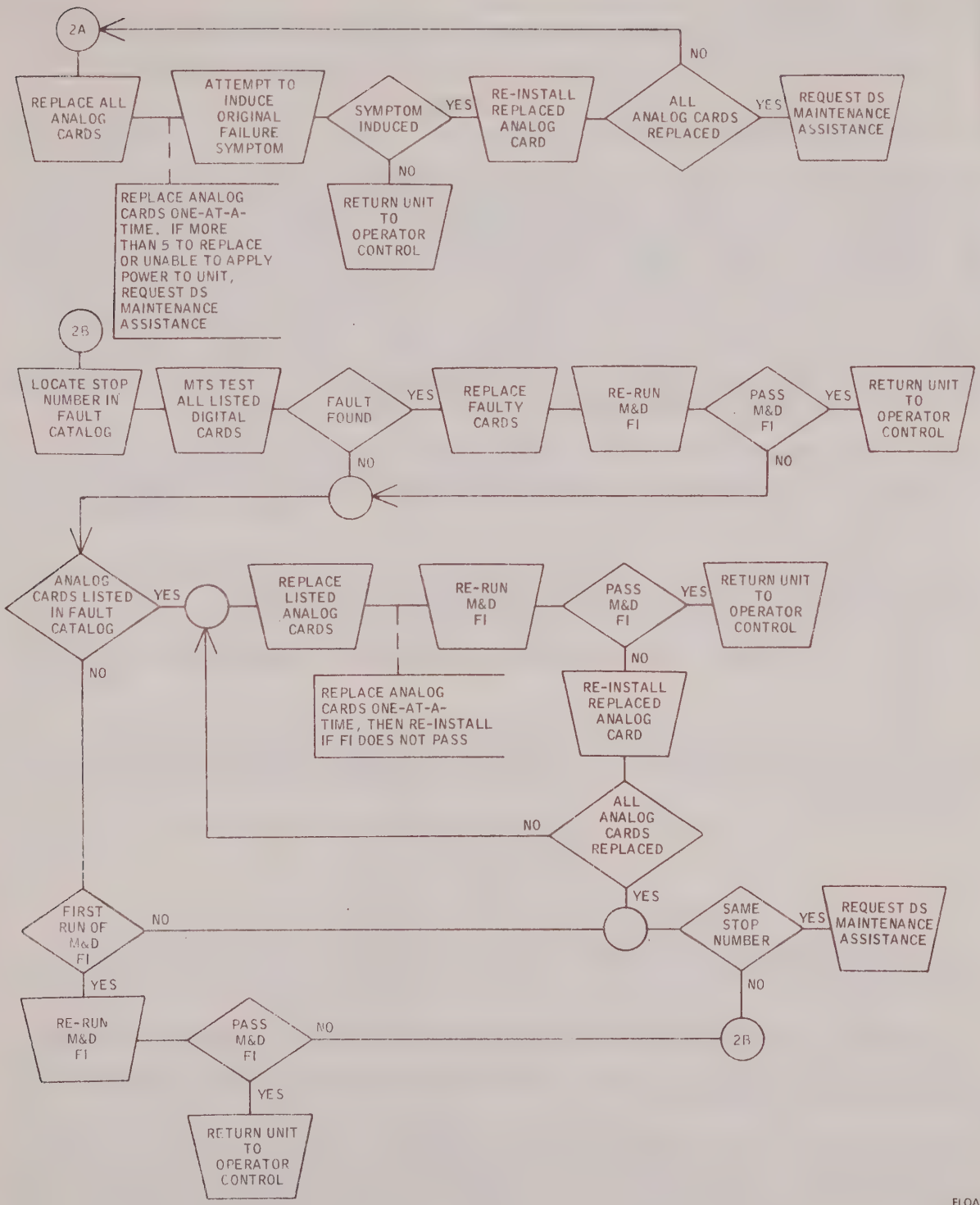

Figure 3-12. Maintenance Task Flow (Sheet 2 of 2)

3-32. Additional Maintenance. If a failed assembly cannot be repaired by organizational maintenance, or if system operation cannot be restored within 30 minutes, contact direct support maintenance. In addition, if any assemblies exhibit intermittent or phantom failures, the cause of which cannot be readily found and corrected, contact direct support maintenance. If it is necessary to continue artillery operations, the operator must employ backup methods per the operator's manual.

3-33. Unit Cleanliness. Equipment exposure to dust or other foreign material should be kept to a minimum. Care should be exercised during maintenance or inventories to ensure that dust, hair, food, or other foreign materials do not enter the units. The card and cable connectors should be inspected for debris before reassembly. Remove all loose debris before inserting cards or connecting cables. If tests indicate an open connection between the circuit card and connector or if a malfunction is to be corrected by removal and reinsertion of a card, remove the card and inspect the connector and card insertion strips for foreign material. Remove any loose debris from card connector. A standard pink pearl eraser can be used to clean the card insertion strips. Ensure that the card is free of eraser residue prior to reinsertion.

3-34. Inspection and Cleaning. Whenever a major assembly is extended from its case assembly and whenever a part is removed, replaced, or reinstalled, inspect exposed surfaces, mating surfaces, and connectors for signs of corrosion or contamination, and proceed as follows:

a. Report signs of corrosion to direct support maintenance. Do not attempt to repair corroded areas, regardless of how minor the repair might be, since depot repair action is required.

b. Remove dust or moisture from exposed surfaces or mating surfaces (when replacing modules) with a dry, clean, lint-free cloth.

c. Remove stubborn dirt particles from exposed surfaces or mating surfaces with a stiff bristle brush. Wipe metallic surfaces with a clean, lint-free cloth moistened with soap and water, dry thoroughly with a dry, clean, lint-free cloth.

CAUTION

Do not use cleaning solvent on circuit card assemblies.

d. When replacing circuit card assemblies, use soft-bristle brush to remove dust or dirt from circuit card and connectors.

e. Inspect cable insulation and condition of connector pins or inserts when replacing cable connected modules. Inspect condition of connector pins or inserts when replacing plug-in modules; report abnormal conditions to direct support maintenance.

f. Inspect threaded mounting wells and attaching hardware for signs of damage when replacing screw-held card assemblies and modules; when removing, replacing, or reinstalling major assemblies; or when a major assembly is extended from its case assembly; report abnormal conditions to direct support maintenance.

Section VII. GENERAL TROUBLESHOOTING AND CORRECTIVE MAINTENANCE

3-35. Introduction. The FDC includes all the necessary facilities for troubleshooting the equipment at the organizational maintenance level. Troubleshooting procedures presented in this chapter are to be performed following the detection of a system malfunction that is isolated to a particular major assembly in the FDC, VFMED, or BDU. Equipment troubleshooting consists of localizing a faulty functional stage within a malfunctioning major assembly in a system and then isolating to a defective subassembly or part. Localization of faulty functional stages in the FDC is performed automatically through the FI functions of the requested M&D program. The actual FI procedures leading to the removal and replacement of defective subassemblies or parts depend on the nature and extent of the trouble automatically detected by executing the M&D program, on the type of equipment and on available hardware indicators. The localization of faulty functional stages in the VFMED and BDU is performed manually by observing fault indicators and exercising equipment functions. This section describes all the FI techniques applicable to the equipment in the FDC, VFMED, and BDU. Specific troubleshooting procedures are presented for each item of equipment in chapters 4 thru 21.

a. *Visual Inspections.* The cause of trouble in a malfunctioning unit or major assembly can, in some cases, be found by visual inspection of the equipment. In other cases, the examination of a component suspected of failing may provide the required fault isolation. Visual inspection should be performed in cases where hardware fault indicators on subassemblies are not lighted, before more elaborate FI procedures are attempted.

b. *Hardware Fault Indications.* Some subassemblies have self-test circuitry for detecting internal faults and for transmitting fault information to fault indicators and to FD circuits within their respective major assemblies. Therefore, when a major assembly is malfunctioning, all applicable hardware fault indicators (on dc/dc converters and front panels) should be checked before more elaborate FI techniques are attempted.

NOTE

If a power fault is suspected (power fault lamp lighted, POWER ON lamp off, and/or dc/dc converter fault light lighted), the power should be recycled. If after recycling power, the fault indicator goes off, resume normal operation. If a power fault is still indicated, start troubleshooting procedures by performing the lamp test and observing the power supply EXT and INT fault lamps.

c. *Software Fault Indications (FDC Only).* Software fault indications are provided by the DIAGNOSE STATUS lamps on the CPU front panel, by the ELP printout, or by ACC displays. These indications are in the form of an FI message which refers to the M&D fault catalog of the operator's manual, and can be obtained only by implementation of the M&D FI tests, when requested by the operator, or by the performance of a CHANNEL 11 PROGRAM LOAD. These software fault indications result in fault isolation to circuit card assemblies. Refer to the operator's manual for detailed instructions.

3-36. Techniques of Fault Isolation to Circuit Card Assemblies. When the cause of trouble in a malfunctioning unit cannot be determined by visual inspections or by observing lighted hardware fault indicators, the operator must initiate the M&D FI program to locate the source of trouble. This program automatically locates a group of digital or analog circuit card assemblies among which a fault exists, and instructs the computer to command the ELP to print out an FI message and to display the FI message on the DIAGNOSE STATUS indicators on the CPU front panel. In addition, since there are no M&D FI tests for the DDT, PCG, and CCU, refer to the applicable maintenance chapter for fault isolation instructions for these units. In the case of the DDT, all digital cards are tested with the MTS, and analog cards are tested by substitution.

CAUTION

To prevent possible damage to equipment, turn off power to unit in which fault is localized before removing or reinstalling a circuit card, module, or cable.

3-37. Fault Isolation Messages. The results of the M&D program FI tests are printed out in plain unabbreviated text at the ELP, displayed in plain unabbreviated text on the RD, and/or displayed in coded octal configuration on the DIAGNOSE STATUS lamps (1 = indicator on; 0 = indicator off) of the CPU front panel.

a. *Decoded Fault Isolation Message.* When the computer and the ELP are functioning properly and no open loops are detected, the ELP will print out the results of the FI test requested by the operator. The decoded FI message (in plain unabbreviated text) consists of the following, three fields of information:

(1) The first field consists of the unit name in plain language as ARMM.

(2) The second field of the test message contains the information of the type of test, FI, and the word PASSED or FAILED.

(3) The third field, REFERENCE – XXXXXX, directs the operator to refer to an octal number XXXXXX, where X represents an octal number (0 thru 7) in the STOP column of the M&D fault catalog. Adjacent to the STOP column in the fault catalog is the CONNECTOR column. The entries in the CONNECTOR column comprise the group of circuit card assemblies within which a fault was detected.

b. *Coded Fault Isolation Message.* In cases where the ELP printout is not available, the FI message displayed on the DIAGNOSE STATUS indicators of the CPU front panel must be interpreted by the operator and translated into an octal number XXXXXX. This six-character octal number corresponds to the STOP information (third field) that would be provided by the ELP FI message. The binary number configuration, or word, represented by the status (on or off) of the DIAGNOSE STATUS indicators consists of four fields of information, when related to component FI tests as follows:

(1) Indicators 1 thru 6 constitute the first field of the FI binary word. This field identifies the binary address of the unit tested (which is the same as in the case of fault detection tests described in the operator's manual).

(2) Indicator 7 represents the second field in the FI word, and will indicate the binary 0 (indicator off) at all times (except when FI is running).

(3) Indicator 8 represents the third field in the FI binary word. If lighted, it represents the binary 1 and indicates that the unit tested has failed the test.

(4) Indicators 9 thru 18 constitute the fourth field of the FI binary word. This field specifies the type of fault and completes the FI message (in its binary configuration) that must be interpreted by the operator.

c. *Interpretation of the DIAGNOSE STATUS Message.* To interpret the message observed on the DIAGNOSE STATUS indicators of the CPU front panel, proceed as follows:

(1) Note 18-bit word represented by status of indicators 1 thru 18. Lighted indicators represent binary 1; indicators not lighted, binary 0.

(2) Convert binary number into octal number (separate binary number into groups of three bits, resulting in six groups of three bits each). Read octal number represented by each 3-bit word, and record result. When the DIAGNOSE STATUS indicators indicate the binary number 001001010000001000 (grouped as, 001 001 010 000 001 000), the octal numbers represented by each group of three bits are then, 1 1 2 0 1 0 . This is the entry in the STOP column of the M&D fault catalog, and will direct the operator to the group of cards he must check to isolate the faulty component.

(3) Look up octal number in the STOP column of M&D fault catalog, and refer to adjacent reference designators in the CONNECTOR column. They indicate a group of card assemblies within which a fault was detected. The M&D fault catalog lists, by reference designator, the card cage connector of the suspect circuit card (e.g., J1501). The assembly card location figures (in the RPSTL, volume 4) use the circuit card reference designator (e.g., A1501). The four-digit number for the corresponding card and connector is the same (i.e., A1501 plugs into J1501). In assemblies with bays and shelves, the first number is for the bay and the second for the shelf (fig. 3-13 example J2125 and A2125).

3-38. Fault Isolation to Digital Card Assemblies. Digital card assemblies, as defined for maintenance purposes, are all circuit card assemblies that can be tested by the MTS. The exposed edge of a digital card assembly (fig. 3-14) is so designed as to mate physically and functionally with the connector of the MTS test probe. The use of the MTS for locating faulty digital card assemblies is described in paragraph 3-41.

3-39. Fault Isolation to Analog Card Assemblies. Any circuit card assembly that cannot be tested by the MTS is referred to throughout this manual as an analog card assembly (fig. 3-14). Certain analog card assemblies include their own hardware fault indicators: a lamp or lamps that light to indicate a faulty card assembly. In most cases, however, a small group of analog card assemblies, among which a faulty card assembly exists, will be disclosed as the result of the M&D FI tests.

a. *Card Assemblies With Fault Indicators.* When an analog card assembly provides its own fault indications, or indications of malfunction in other cards, the troubleshooting technique leading to FI consists merely in the observation and/or interpretation of these fault indications.

b. *Card Assemblies Without Fault Indicators.* When an analog card assembly does not provide its own fault indications and is not monitored by another analog card assembly with fault indicators, it must be checked by the substitution method. Isolate a faulty analog card assembly by the substitution method as follows:

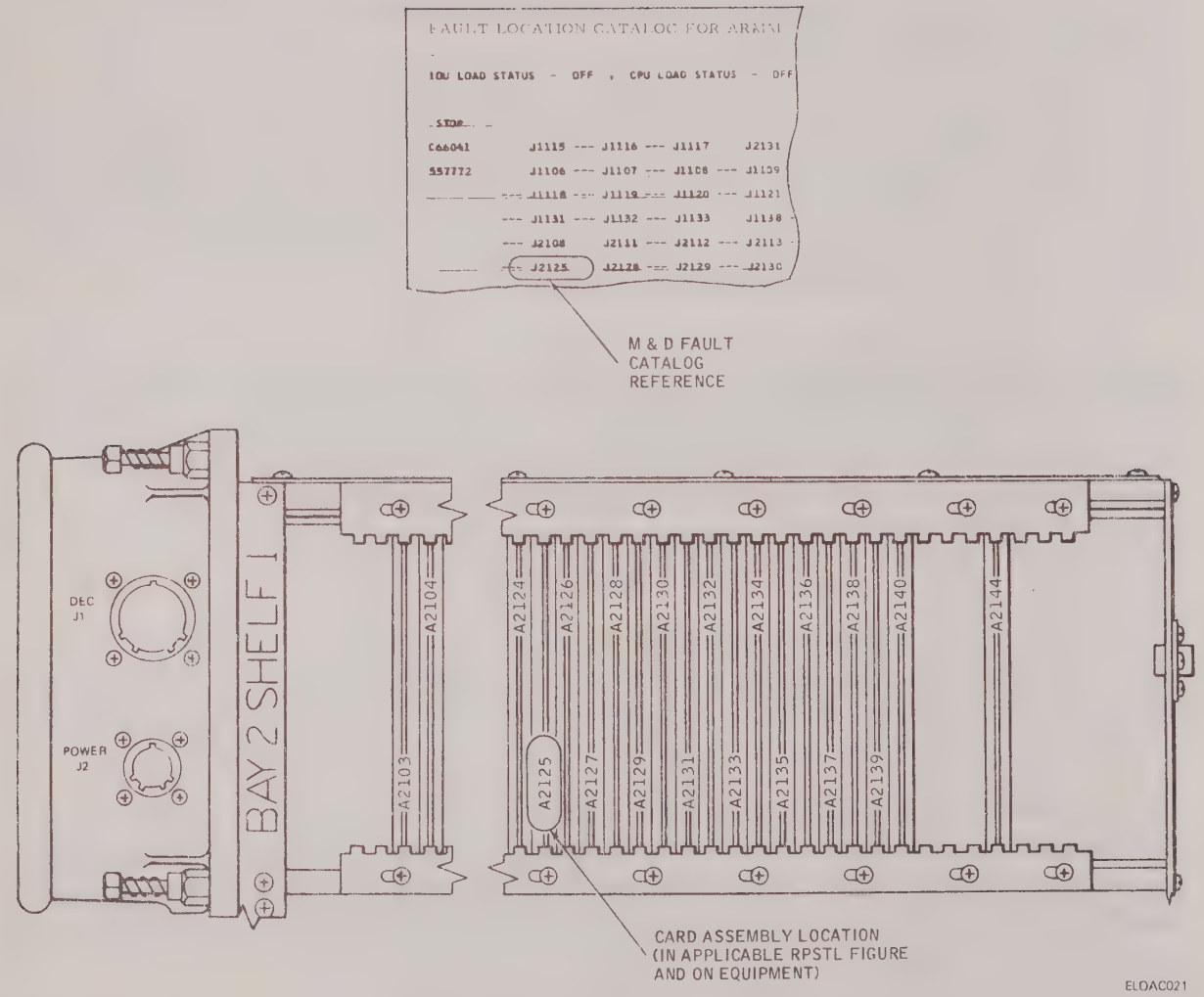

Figure 3-13. Card Slot Identification

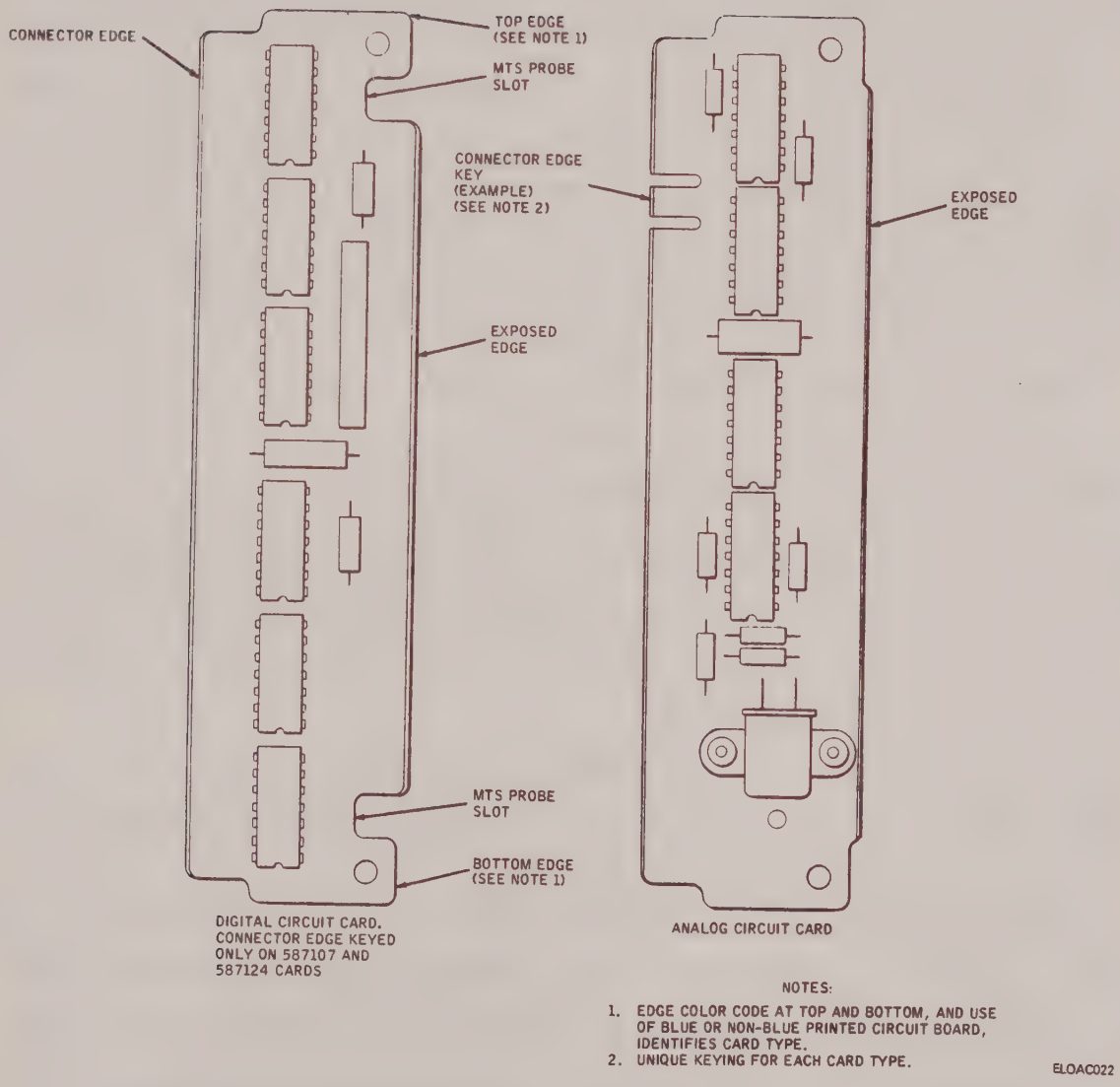

Figure 3-14. Digital and Analog Circuits Cards

(1) Note group of analog card assemblies suspected of being faulty, as disclosed by result of M&D FI test.

(2) Replace first card in that group with known good card. Verify that replacement card is properly installed and seated in connector. Repeat original FI test. Observe ELP printout and fault indicator on major assembly, or any other indications that made it necessary to run FI test the first time.

(3) If faulty condition is not corrected, reinstall replaced card and replace second card in group suspected of being faulty. Repeat original FI test. Again, check whether trouble has been corrected.

(4) Continue procedure until, if necessary, last analog card assembly has been replaced, or trouble corrected. If trouble is corrected by replacement of a card, reinstall suspect card to verify that failure still exists and is, in fact, cured by replacement card. This failure verification may be deferred if an immediate operational status is essential, and performed when time allows. Refer to standard operating procedures or other directives.

(5) Verify that all cards in test assembly are properly seated.

NOTE

This check can be performed rapidly and conveniently when the card racks are exposed by running fingertips lightly over the edge of the cards in a continuous motion, parallel to the shelves. Poorly installed cards will be felt, since they extend slightly beyond the average level of the majority of the cards. Care should be taken that fingertips are clean and dry prior to this strumming of the cards.

(6) Tag faulty card whose replacement corrected the trouble, forward it to supply, and return remaining cards to appropriate spares storage cases.

NOTE

Except for failed card(s), reinstall original card(s) in appropriate connector and return spare card(s) to repair parts box.

(7) Secure test assembly to transit case and rerun FI test.

3-40. Selection of M&D Fault Isolation Program Tests. The M&D program tests are requested by the operator using the same test-request provisions of the ACC or the IOU described in the operator's manual, except for FI on the computer, IOU, and MCMU, which require the program load from the ARMM or MTU.

a. *Requesting Fault Isolation Tests from the ACC.* The M&D FI tests provide, on operator request, isolation to groups of replaceable circuit card assemblies or modules in a malfunctioning unit. Request the M&D FI test routine for a particular malfunctioning unit from the ACC as follows:

(1) Display SYS;MDS message format (refer to operator's manual).

(2) Actuate keyboard cursor to align cursor with first typing space following mnemonic for assembly to be tested.

(3) Using keyboard, type letter P onto test selection message skeleton.

(4) On SPA, press C/ED CMPTR ACTION switch.

(5) Check ELP printout or CPU DIAGNOSE STATUS lamps for FI message.

b. *Requesting Fault Isolation Tests from the IOU.* The FI test selection procedure is identical to that described in the operator's manual for fault detection test requests from the IOU. For FI test requests from the IOU, however, the TEST thumbwheel switch settings must be as listed in table 3-12; these settings are also listed on a decal on the IOU front panel.

c. *Fault Isolation Using Program Load.* FI programs for the CPU, IOU, and MCMU are available only during the CHANNEL 11 PROGRAM LOAD (load from tape). The FI program is stored on the master tape cartridge and is not stored in the MCMU after the program has been loaded. Faults and faulures detected and isolated during the program load are listed in the fault catalog. The fault catalog contains detailed instructions for use of the FI tests and fault catalog. The only fault indication display is the DIAGNOSE STATUS indicators on the CPU. The IOU/CPU LOAD STATUS indicators on the CPU indicate the portion of the FI program being run. Therefore, the interpretation of the STOP number displayed is dependent on the load status condition.

3-41. Fault Isolation Using the MTS. When a particular FI test is run, the resulting FI message will refer the operator to an entry in the fault catalog. Related to the reference entry are a number of card assemblies of which any or all card assemblies in the referenced group may be faulty. If the FI message refers to analog card assemblies, isolation to these card assemblies must be performed as instructed in paragraph 3-3g. If the FI message refers to digital card assemblies, each card assembly in the referenced fault catalog group of cards must be tested with the MTS. The MTS provides the capability for both in-system card tests and individual card tests.

a. *In-System Card Tests.* Digital card tests are performed on cards installed in units by connecting the test cable to the unit containing the card to be tested, and connecting the test probe to the card to be tested. The cards which can be tested with the MTS are listed in table 3-13. As the test probe is connected to the digital card, the card test is automatically initiated, and results of the test are displayed on indicators mounted on the test probe handle as well as on the front panel of the MTS. The test cable from the MTS to the unit under test allows the MTS to control the power that is applied to the card under test. Perform the in-system card test procedure as follows:

(1) Turn off power to faulty unit by actuating applicable switch and observing power off indications.

(2) Extend faulty major assembly from its case assembly. Refer to paragraph 3-45a.

CAUTION

Do not yank on test connector shorting cap lanyard because shorting cap can be damaged.

(3) Remove test connector shorting cap (identified in table 3-14).

Table 3-12. IOU TEST Switch Settings for Fault Detection and Isolation

Switch setting	FD index decal	Test program	Remarks
00	CAN	Cancel all tests	
01	MEM	MCMU fault detection	MCMU
02	CPU	CPU and MCMU fault detection	
03	LLT	Local loop test	
04	KG	KG fault detection	
05	RAM	Not used/illegal	
06	ARM 1	ARMM-1 or MTU-1 fault detection	
07	ARM 2	ARMM-2 or MTU-2 fault detection	DivArty FDC only
10	ELP 1	ELP-1 fault detection	DivArty FDC only
11	ELP 2	ELP-2 fault detection	
12	ACC	ACC fault detection	
13	ETD	ETD fault detection	DivArty FDC only
14	DPM	DPM fault detection	
15	DDT-A	DDT-A fault detection	
16	DDT-B	DDT-B fault detection	
17	DDT-C	DDT-C fault detection	
20	DDT-D	DDT-D fault detection	
21	DDT-E	DDT-E fault detection	
22	DDT-	DDT-F fault detection	
23	DDT-G	DDT-G fault detection	DivArty FDC only
24	DDT-H	Not used	
25		Not used	
26	ARMM-1	ARMM-1 or MTU-1 fault isolation	
27	ARMM-2	ARMM-2 or MTU-2 fault isolation	DivArty FDC only
30	ELP-1	Fault isolation	
31	ELP-2	Fault isolation	DivArty FDC only
32	AGC	Fault isolation	
33	ETD	Fault isolation	DivArty FDC only
34	DPM	Fault isolation	
35	BDUFI	BDU fault isolation	
36		Not used	

A643-1

Table 3-12. IOU TEST Switch Settings for Fault Detection and Isolation -- Continued

Switch setting	FD index decal	Test program	Remarks
37	RLT	Remote loop tests – all	
40	VMED	VFMED remote loop test	
41	DMD	TFDMD remote loop test	
42	BDU	BDU remote loop test	Bn FDC only
43	FDC	FDC remote loop test	

A643-2

Table 3-13. Circuit Cards Tested by Module Test Set

Card part number	Card type and function
587011	DH1 – DTL hex, single input gate (diode)
587012	DQ2 – DTL quad, two input gate (diode)
587013	DT3 – DTL triple, three input gate (diode)
587014	DD4 – DTL dual, four input gate (diode)
587015	DB4 – DTL dual, four input buffer (diode)
587016	DJK – DTL dual J-K flip-flop (diode)
587101	TJK – TTL dual J-K flip-flop
587102	TQ2 – TTL quad, two input gate
587103	TT3 – TTL triple, three input gate
587104	TD4 – TTL dual, four input gate
587105	TDD – TTL dual flip-flop
587106	TLD – TTL quad, two input lamp driver
587107	IOC – I/O circuit, ac coupled
587108	TS8 – TTL single, eight input gate
587109	MEM – TTL 16-bit memory cell
587110	ADD – TTL adder with extender inputs
587111	DH1 – DTL hex, single input inverter
587112	DQ2 – DTL quad, two input gate
587113	DT3 – DTL triple, three input gate
587114	DD4 – DTL dual, four input gate
587115	DB4 – DTL dual, four input buffer
587116	DJK – DTL dual J-K flip-flop
587117	TH1 – TTL hex, single input inverter
587124	DCC – dc coupled interface card

644

Table 3-14. Identification of MTS Test Connectors on Units and Major Assemblies

Unit or major assembly	Unit test connector reference designation	Unit or major assembly	Unit test connector reference designation
CPU	J10	DE	J4
IOU	J15	DCU	J5
ARMM	J5	DDT[1]	J7
ETD	J5	MCMU	J1104
SPA	J4	RDT	J2128
		MTU	J1104

[1]For DDT test, also connect W265 between J1 and J3 on DDT and disconnect cable to J6.

645

NOTE

Shorting cap must be reinstalled on test connector when card tests are completed. Extract shorting card A1104 for the MCMU, A1104 for the MTU, or A2128 for the RDT, with MTS card extractor. The MCMU, MTU, and RDT use card type connectors in lieu of the standard cable connector provided on the other assemblies.

(4) Ensure that MTS is connected to PCG as shown in figure 3-15.

(5) Connect test probe connectors P1 and P2 (W267) to MTS connectors J1 and J2, respectively. Refer to figure 3-15.

(6) Connect test cable W117 connector P2 to MTS connector J4.

(7) Connect test cable W117 connector P1 to MTS test connector of unit containing card to be tested. Connect adapter cable W268P1 to test cable connector P1 when testing the MCMU, MTU, or RDT and insert W268P2 into J1104 for the MCMU, J1104 for the MTU, or J2128 for the RDT.

(8) Press POWER ON switch on MTS to light POWER ON indicator.

(9) Turn on power to faulty unit by actuating applicable switch and observing power-on indications.

(9A) Press CONTINUOUS CYCLE switch to turn off CONTINUOUS CYCLE indicator.

CAUTION

When connecting and disconnecting the MTS probe to the circuit card exposed edge, press the probe straight onto the card. Do not use a rocking motion. Use the card release trigger on the probe handle to separate the card under test from the probe. If any movement of the card is felt or observed, if the row of cards does not line up to the eye, or if the card retainer cannot be slid over and locked, it is likely that a card has been moved. Press cards firmly into the card-bay connector before proceeding further.

CAUTION

Whenever the MTS is used on a DDT, the data line connection to either a radio or telephone circuit (field wire) must be opened to prevent transient signals.

(10) Connect test probe to circuit card exposed edge. Card test starts automatically, and GO and NO-GO indicators light while test is in progress. When card test stops, either the GO indicator stays on, indicating a good card test, or the NO-GO indicator remains illuminated. If the NO-GO indicator is illuminated observe the status of the +5V logic short, continuity, ground, and functional indicators. The card has failed only if any of the continuity of functional indicators are illuminated. If a failure is detected, refer to paragraph 3-46 in this chapter for removal and replacement of card.

NOTE

If card part number 587101 (card slot numbers A2114 and A2115) indicates functional failures on Z1 or Z2, retest suspected card(s) in MTS front panel. If MTS front panel test is successful, return card(s) to respective location(s) in DDT and continue MTS fault isolation. To facilitate testing of cards in left-hand card bay of the DCU, use flashlight (in tool kit) or equivalent, to supplement interior shelter lighting.

(11) Disconnect test probe from card connector. Verify that card is still firmly seated.

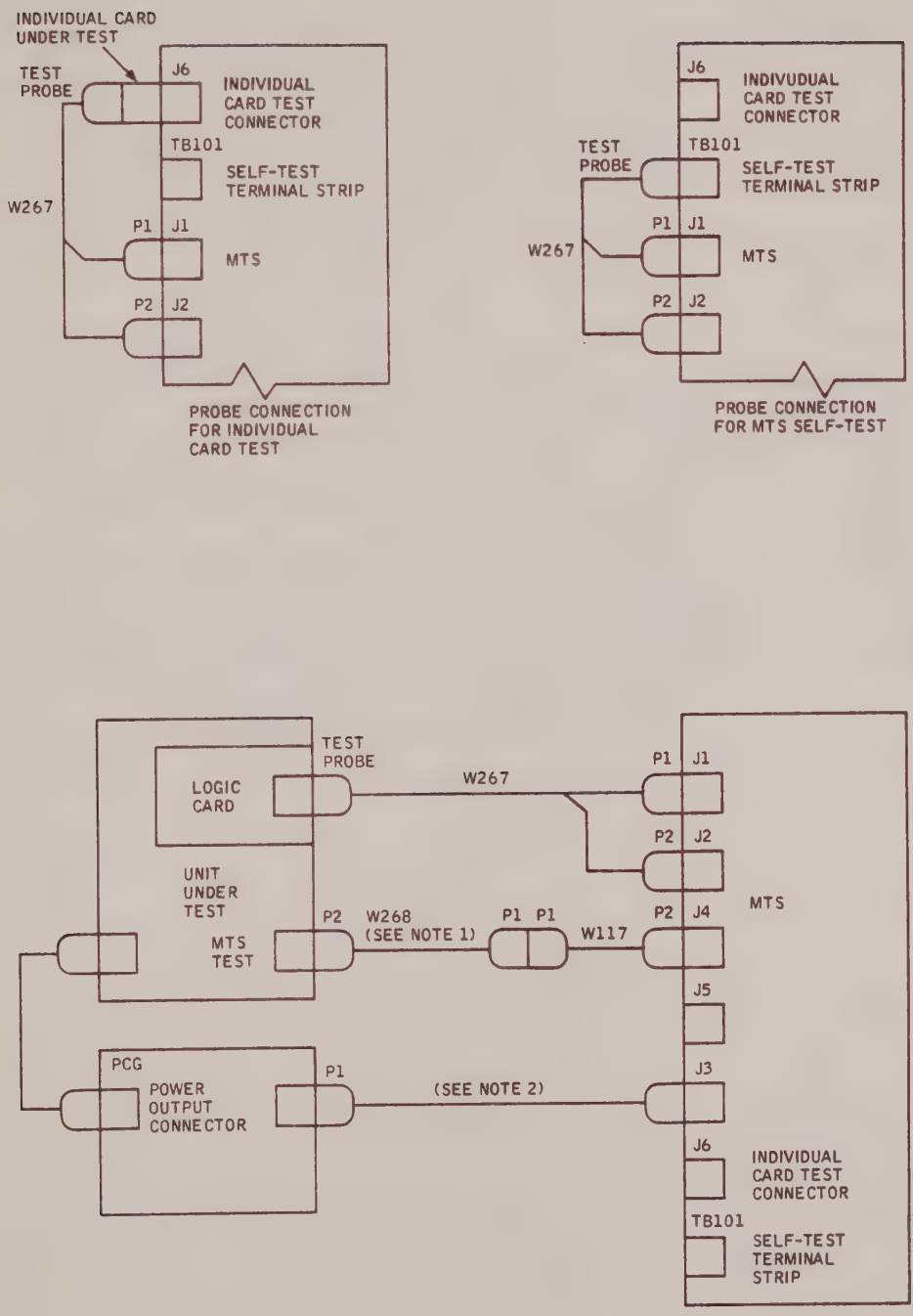

NOTES:

1. CABLE ASSEMBLY W268 IS USED TO TEST ONLY THE MCMU, MTU, AND RDT.
2. SEE SHEET 2 FOR PCG/MTS CONNECTIONS.

ELOAC023

Figure 3-15. Typical MTS Connection Diagram (Sheet 1 of 2)

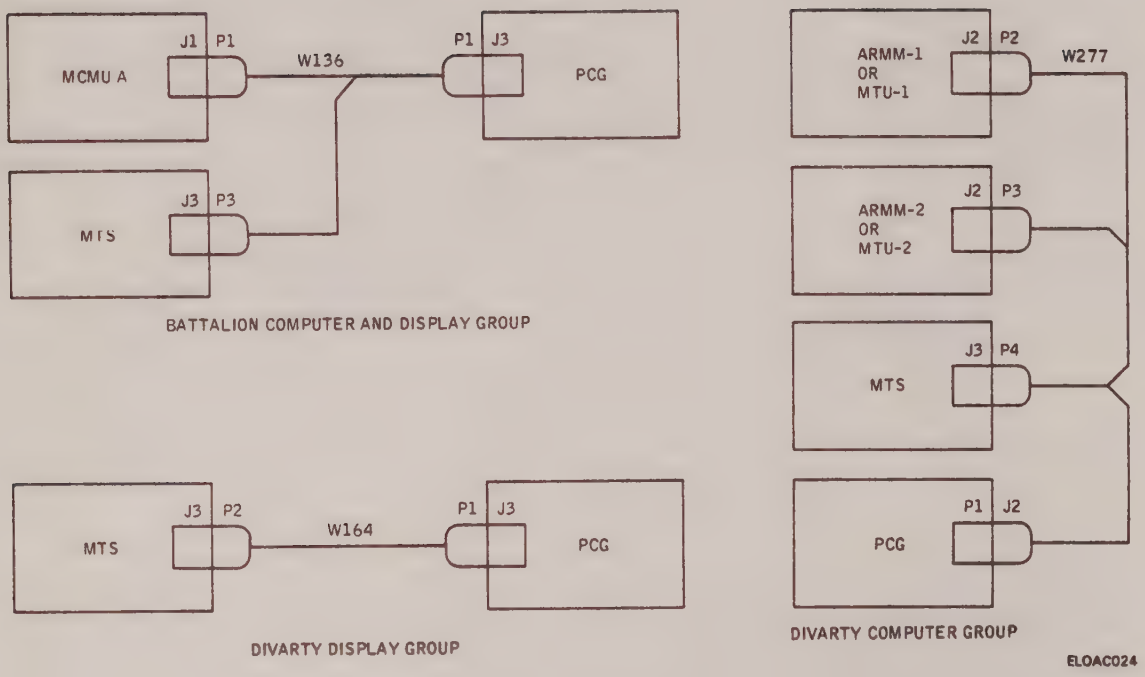

Figure 3-15. Typical MTS Connection Diagram (Sheet 2 of 2)

(12) Press POWER ON switch to turn off POWER ON indicator.

(13) Disconnect test cable W117 connector P1 from MTS test connector of unit containing card tested, or extract W268P2 from MCMU J1104, MTU J1104, or RDT J2128.

(14) Connect shorting plug to MTS test connector of unit containing card tested; or insert shorting card into J1104 for MCMU, J1104 for MTU, or J2128 for RDT.

(15) Verify that all cards in tested assembly are firmly seated.

NOTE

This check can be performed rapidly and conveniently when the card racks are exposed by running fingertips lightly over the edge of the cards in a continuous motion, parallel to the shelves. Poorly installed cards will be felt, since they extend slightly beyond the average level of the majority of the cards. Care should be taken that fingertips are clean and dry prior to this strumming of the cards.

(16) Secure tested assembly to transit case (refer to paragraph 4-45b) and rerun test.

b. *Individual Card Tests.* Digital cards may be tested individually in the MTS by inserting the digital card to be tested into single card test connector J6 (behind the door of the MTS front panel). The card test is automatically initiated when the test probe makes connection with the card. The MTS test cable is not used in these tests. Perform the individual card test as follows:

(1) Ensure that MTS is connected to PCG as shown in figure 3-15.

(2) Connect test probe connectors P1 and P2 to MTS connectors J1 and J2, respectively.

(3) Press POWER ON switch to light POWER ON indicator.

(4) Press CONTINUOUS CYCLE switch to turn off CONTINUOUS CYCLE indicator.

CAUTION

To prevent electrical damage to the card, install the card with the component side of the card to the left of the operator.

(5) Install card to be tested into MTS individual card test connector J6.

(6) Connect test probe to card test connector. Card test starts automatically, and GO and NO-GO indicators light while test is in progress. When card test stops, either the GO indicator stays on indicating a good card test, or the NO-GO indicator stays on and a fault indicator lights indicating a failed card test. The type of fault and location of fault on the card is also indicated.

(7) Disconnect test probe from card test connector.

(8) Remove card tested from MTS individual card test connector J6.

(9) Press POWER ON switch to turn off POWER ON indicator.

c. *Erroneous Card Test Results.* A defective reed relay on the MTS testable cards, except the diode to transistor logic (DTL) series 587011 to 587016, will exhibit the symptoms described in the following paragraphs.

(1) *Condition 1.* If the card passes the FI test, fails the MTS in-system test, and passes the MTS individual test, then these cards are usable. However, their location should be logged and they should be replaced at an opportune time.

(2) *Condition 2.* If the card fails the FI test and passes the MTS in-system test, then organizational maintenance can attempt to isolate the card by substitution while waiting for maintenance assistance from direct support or evaluation / replacement of the failed assembly.

3-42. Repair Verification at FDC. To verify successful repair of a malfunctioning unit at the FDC, perform the following procedure:

a. Apply power to unit by actuating applicable switch or switches.

b. Observe that all fault indicators remain off and that all operation indicators are in the proper state.

c. Initiate applicable M&D FI test routine (refer to paragraph 3-40).

d. If unit passes FI test and front panel indicators do not indicate a fault, unit can be assumed to be operational.

e. As a second verification, initiate local loop test, applicable fault detection (FD) test, and/or manual self-test if unit is so equipped.

f. If results of FI test, or a front panel indicator, or improper operation indicate a fault, continue troubleshooting procedures.

NOTE

If the repaired unit does not have an M&D FD test and FI test, verification is accomplished using the local loop test and observation of front panel indicators and operation only.

3-43. Repair Verification in VFMED and BDU Configuration. If the repaired unit is in a VFMED or BDU configuration, repair verification is accomplished using the applicable remote loop test, VFMED FI test (refer to TM 11-7440-253-10) and/or the BDU FI test in conjunction with front panel indicators and manual self-test procedures. If the M&D tests fail, and front panel indicators and manual self-test indicate improper operation, continue troubleshooting.

NOTE

If the malfunction cannot be corrected by replacement of parts, notify direct support maintenance.

3-44. Fault Isolation of Cable Assemblies. If equipment malfunctions cannot be corrected by performing all other normal FI procedures, a defective cable assembly may be the cause. The only method available to organizational level maintenance personnel for making this determination is by cable assembly substitu-

tion. The general procedure for this consists of first disconnecting a suspected cable assembly (but leaving it in place as routed through its normal channels); then, obtaining a replacement cable assembly and stringing it out in the most direct route from unit-to-unit. If the replacement cable corrects the malfunction, the defective cable should be withdrawn and the replacement routed into place. Cabling diagrams are provided in FO-1 thru FO-6 for identification. If the malfunction is not corrected, direct support assistance should be requested.

Section VIII. GENERAL REPAIR PROCEDURES

3-45. General Maintenance Practices and Techniques. The major assemblies of the BDU, VFMED, and FDC equipment are installed in case assemblies from which they can be extended for maintenance actions. Each major assembly rides on slide assemblies or is installed in a sliding substructure of the case assembly. Figure 3-16 illustrates the two types of sliding mounts provided for the major assemblies in the FDC. In one type, the center tracks of the slide assemblies are part of the major assembly and ride inside two telescoping channels that are part of the case assembly. In the other type, the major assembly is mounted in the compartment of a sliding substructure of the case assembly, with the center tracks secured to the sliding substructure and riding inside two telescoping channels secured to the case assembly.

a. *Extending Major Assembly Out of Case Assembly.* In the two types of sliding mounts illustrated in figure 3-16, the center track of each slide assembly (except slide assemblies on the top of certain units) is equipped with two lock-devices. One of these, a spring-loaded lever, prevents the accidental removal of the major assembly from its case. The second lock-device, also a spring-loaded lever, prevents the major assembly from being accidentally pushed back into the case during maintenance. To extend a major assembly from the case assembly, whether mounted directly on slide assemblies or on the sliding substructure of the case assembly, proceed as follows:

CAUTION

Equipment may be operated extended from the transit case during maintenance procedures only. If operation with one of two dual units removed from transit case is necessary, a blank panel must be installed over the open hole in the case and connector caps must be installed on the cables normally attached to the missing unit (panels and caps are stocked at direct support maintenance). These procedures are required to minimize radiation and interference.

CAUTION

Cable assemblies are routed and held in place with various types of cable bracket assemblies. Although a cable service loop permits the extension of a major assembly with the cables connected, cables must be unhooked from the brackets if an assembly is to be extended beyond the limits of the service loop. Otherwise, damage to the cable assembly connector and to the mated connector on the major assembly might occur.

(1) Release all external cable assemblies, connected to major assembly, from their overhead cable retainers.

(2) Release captive screws that secure major assembly or sliding substructure of case assembly to case assembly.

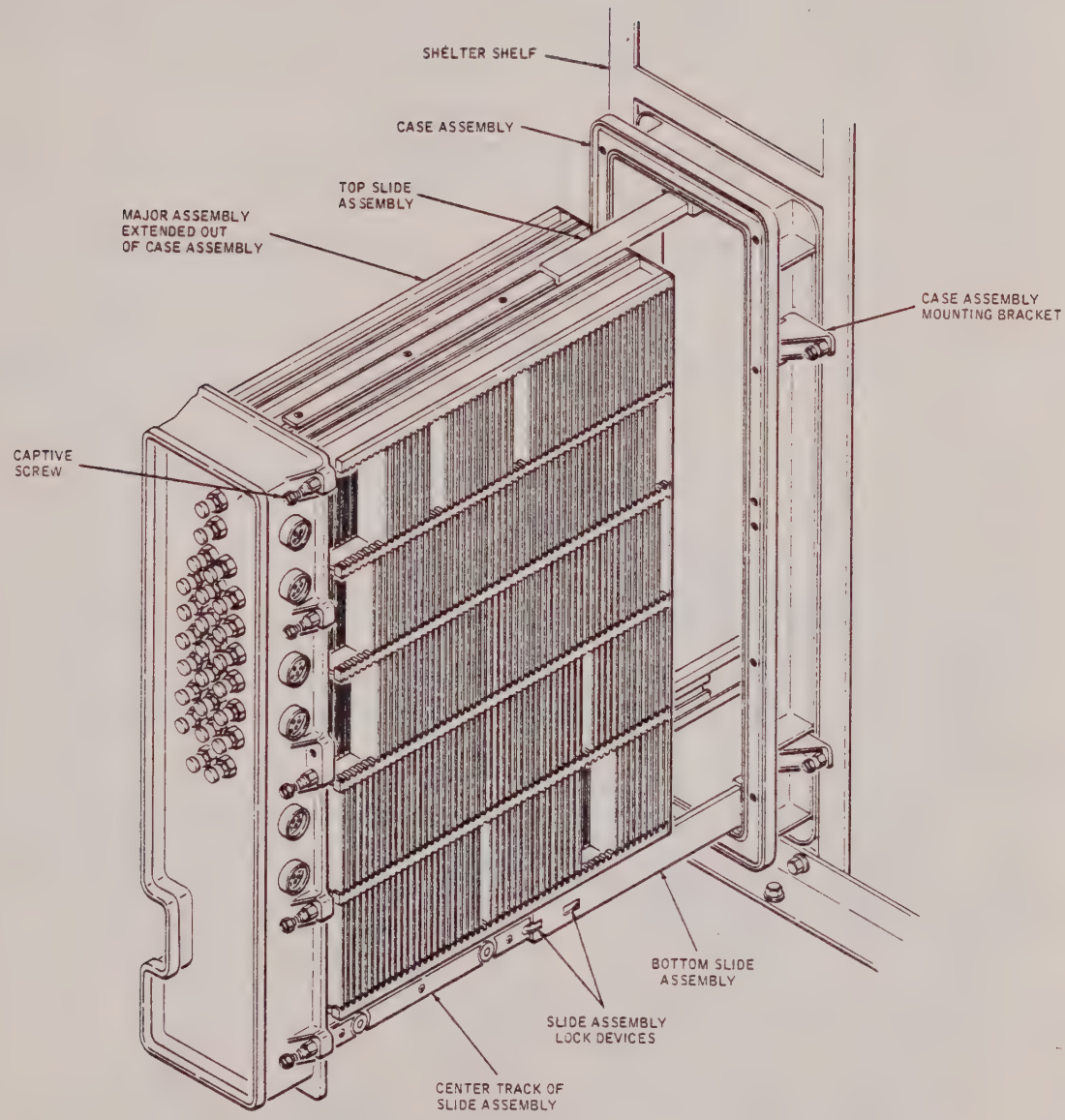

Figure 3-16. Major Assembly Sliding Mounts (Sheet 1 of 2)

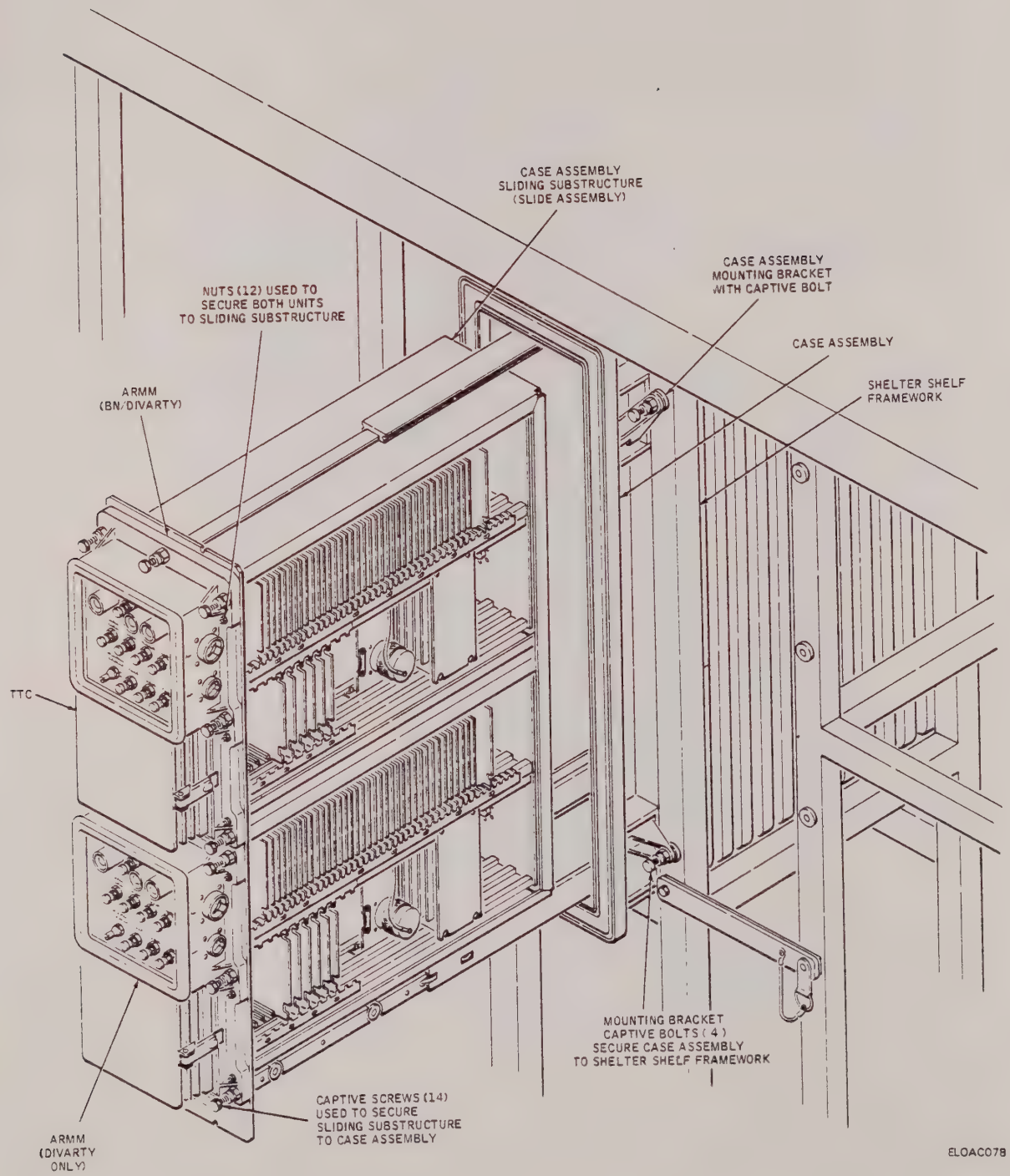

Figure 3-16. Major Assembly Sliding Mounts (Sheet 2 of 2)

WARNING

In the out-of-shelter configuration, extending the ELP or the ACC from the case causes a forward out-of-balance condition. The unit can tip forward and cause injury or damage. Therefore, when extending either unit, obtain a table from in-the-field sources and support the extended unit on the table.

(3) Pull major assembly or case sliding substructure out of case assembly to out-locked position of center tracks.

b. *Retracting Major Assembly Into Case Assembly.* Return the major assembly to its normal installed position as follows:

(1) On the two lower center tracks of major assembly or sliding substructure of case assembly, press spring-loaded levers that prevent accidental retraction of major assembly into case, and push major assembly into case assembly.

(2) Engage captive screws on major assembly into threaded wells provided for that purpose in case assembly.

NOTE

Captive screws should be tightened to 5 to 6 foot-pounds to ensure secure fitting of emi gaskets.

(3) Ensure that all external cable assemblies connected to major unit are positioned properly in their respective overhead cable troughs and are hooked onto related cable brackets.

3-46. Removal and Replacement of Card Assemblies and Modules. The major assemblies in the FDC contain easily removable card assemblies and modules that are grouped in five basic categories (fig. 3-17): retainer-held plug-in card assemblies; guide-held plug-in card assemblies; screw-held plug-in card assemblies; screw-held plug-in modules; and screw-held cable-connected modules. Special handling procedures and standard removal and replacement procedures for these types of replaceable subassemblies are described in the following paragraphs.

CAUTION

To prevent possible damage to equipment, turn off power to unit in which fault is localized before removing or reinstalling a circuit card, module, or cable.

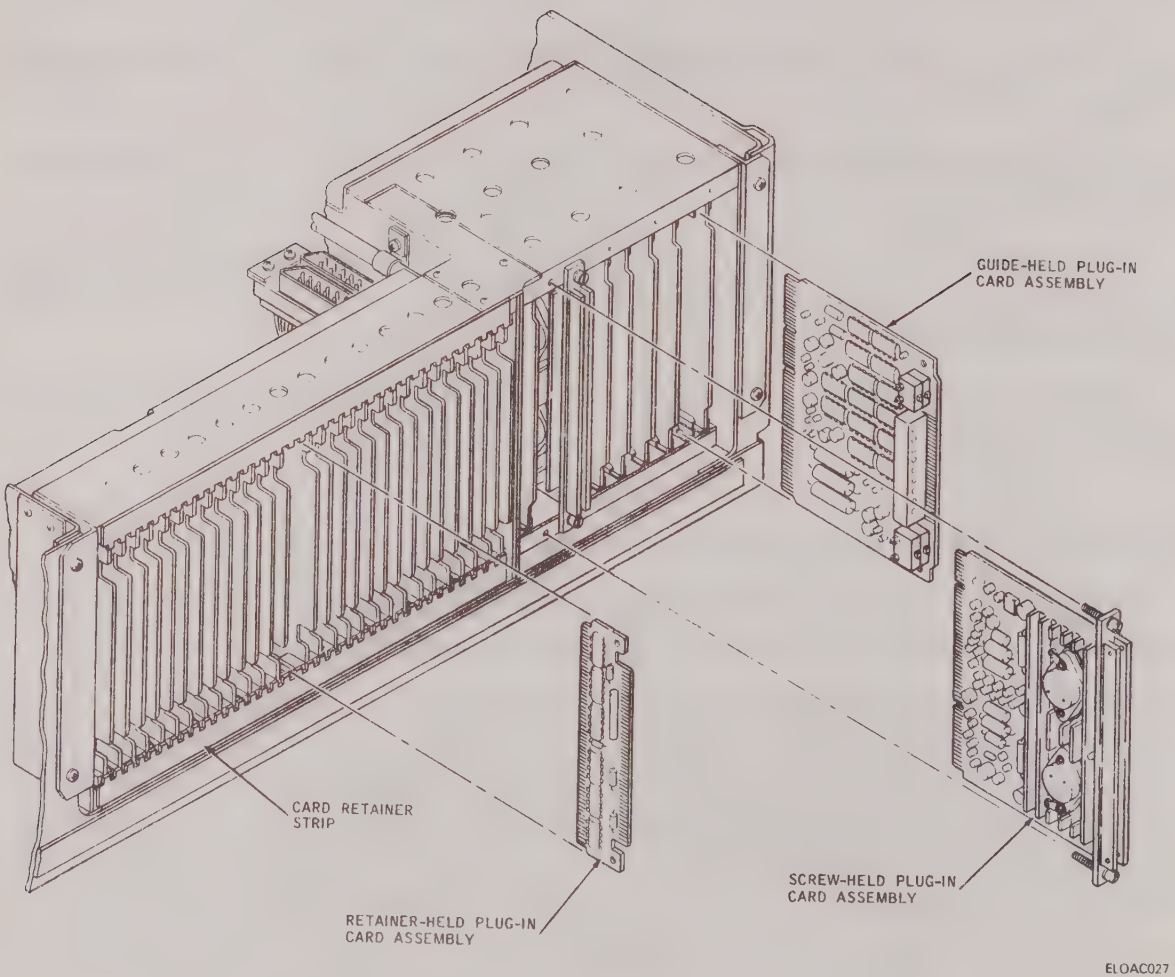

Figure 3-17. Circuit Card Assemblies and Modules Typical Installation Details (Sheet 1 of 2)

a. *Special Handling of MOS Plug-In Card Assemblies.* A significant number of circuit card assemblies incorporate MOS devices that can be damaged by static charges during handling. These card assemblies require special handling when removing and replacing, and when shipping to depot repair facilities. The major assemblies using these card assemblies are the RDT, ELP, DDT, MTS, CCU, and RCMU; refer to the applicable unit level chapters in this manual for the specific cards of each unit. To prevent damage to the MOS devices, maintenance personnel must observe the following precautions:

CAUTION

The following procedure must be adhered to for preventing damage to MOS devices from static charges.

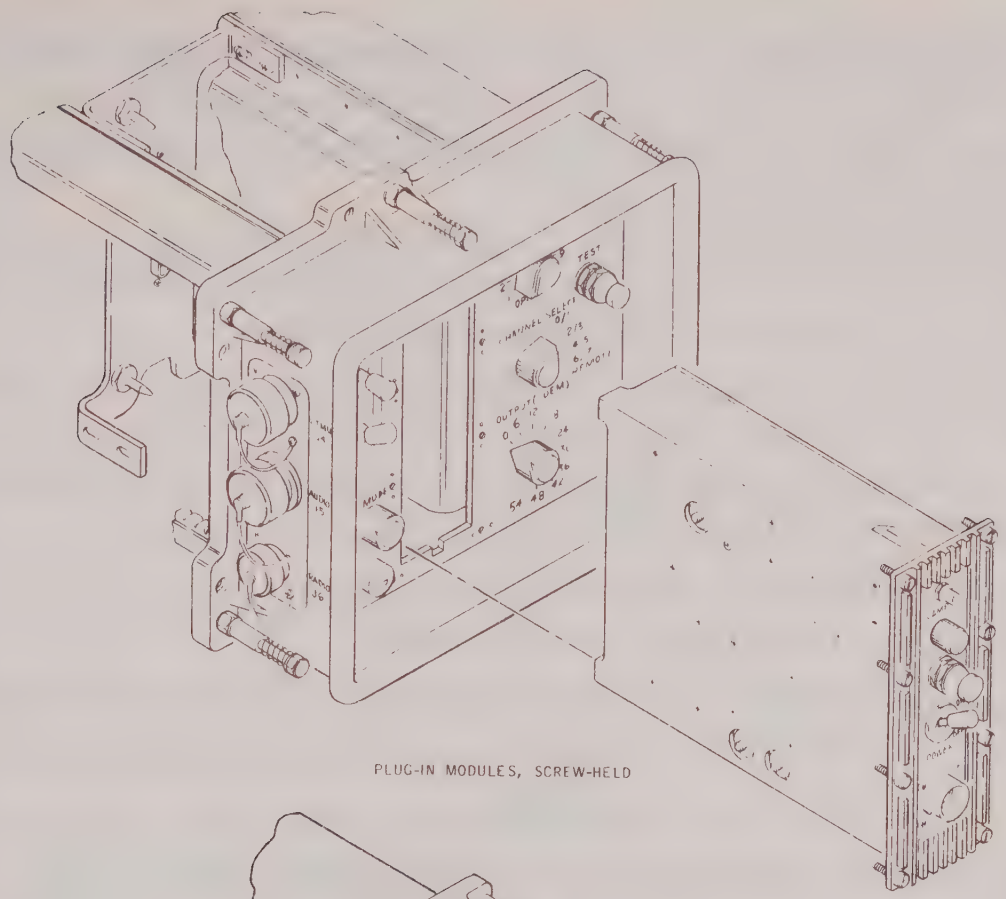

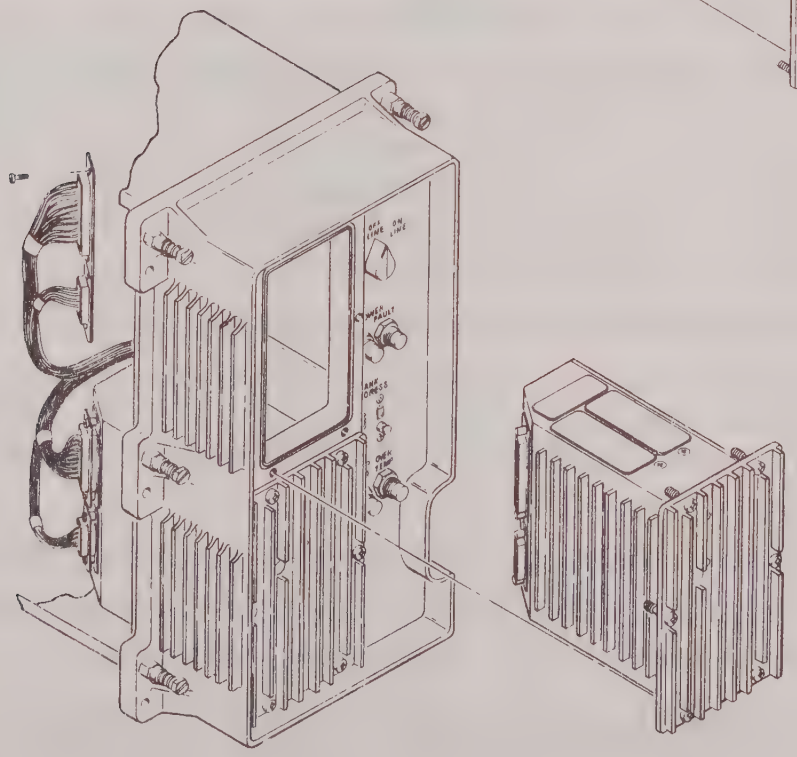

ELOAC028

Figure 3-17. Circuit Card Assemblies and Modules Typical Installation Details (Sheet 2 of 2)

(1) Do not touch any exposed electrical conductors on the card while handling. This applies mainly to the card edge-connector.

(2) Maintain a discharge path for static charges on your body by touching any metal structure connected to earth ground before and while handling the card.

(3) Spare cards with MOS devices are supplied in a static-free bag. If a card is removed from a major assembly, place the removed card in the same static-free bag from which the spare was removed; the card must be kept in the static-free bag for either storage or shipment to depot.

b. *Removal and Replacement of Retainer-Held Plug-In Card Assemblies (Fig. 3-17).* Remove and replace a retainer-held plug-in card assembly as follows:

(1) On each card-retainer strip, press small spring-loaded plunger holding strip in card-retaining position and slide card retainer strip over to card-releasing position.

(2) Using card extractor, remove card assembly as follows:

(a) Engage card extractor pins in holes of card to be removed.

(b) Squeeze and hold card extractor grip and remove card from card cage. Hold removed card with free hand and then release pressure on card extractor grip.

CAUTION

To facilitate identification, each functional type of digital card assembly that is MTS testable is color-coded at the corners. All analog card assemblies are uniquely keyed. When a circuit card assembly is correctly installed in the card rack, the color at each corner of the card assembly matches the color on the retaining station of the corresponding card-retainer strip. Any mismatch of color codes along either card-retainer strip indicates an incorrect circuit card installation. Incorrect card assembly installation may cause damage to card components.

(3) Install replacement card assembly by hand, or reinstall analog card assemblies as follows:

(a) Ensure that color at each corner of replacement card assembly matches that on retaining station of corresponding card retainer strip and that card type is correct for card slot; position replacement card assembly between card guides (accessible through rectangular openings of card-retainer strips) in card rack.

(b) Push new card assembly into card guides and insert into connector slot in card rack.

(c) Slide card retainer strips back to their original card-retaining positions. Check that color code is not mismatched along card-retainer strips and that card assembly is seated properly.

(4) Tag faulty card assembly or assemblies that are to be forwarded to supply, and note defect problems. For analog card assemblies, where removal and replacement are part of the FI procedures, repeat steps (2) thru (3) (b) for each card assembly or group of card assemblies, in order, until trouble is corrected.

c. *Removal and Replacement of Guide-Held Plug-In Card Assemblies.* Removal and replacement procedures for the guide-held plug-in card assemblies are identical to the procedures for retainer-held plug-in card assemblies, except that these assemblies are installed and held in position between spring-type card guides.

d. *Removal and Replacement of Screw-Held Plug-In Card Assemblies.* Remove and replace a screw-held plug-in card assembly as follows:

WARNING

Red-coded cards are hot to touch. Use caution in handling.

(1) Remove screws that secure screw-held plug-in card assembly to exposed faces of card cage.

(2) Pull card assembly out by hand. Observe mounting and installation details.

(3) Position replacement card assembly into card guides in card cage, as observed for original card assembly.

(4) Push new card assembly into card guides until it seats into connector slot in card cage.

(5) Install screws to secure installation.

(6) Tag faulty card assembly which is to be forwarded to supply and note defect problem.

e. *Removal and Replacement of Screw-Held Plug-In Modules.* Remove and replace a screw-held plug-in module as follows:

WARNING

Dc/dc converters may be hot. Use caution when handling.

(1) Release captive screws that secure plug-in module to major assembly chassis.

(2) Remove plug-in module from major assembly chassis.

(3) Remove emi gasket from plug-in module or from major assembly chassis.

(4) Install emi gasket over captive screws and onto replacement dc/dc converter.

(5) Position replacement plug-in module into chassis so that chassis guide-pins and module guide-pin bushings can be mated. Push plug-in module into chassis to engage guide pins and bushings.

CAUTION

Be sure that the chassis guide-pins and the module bushings are mated before attempting to engage the chassis and module connectors.

(6) Push plug-in module further into chassis a id engage chassis and module connectors.

(7) Engage captive screws on module with threaded wells in chassis to secure installation.

(8) Tag faulty module which is to be forwarded to supply and note defect problem.

f. *Removal and Replacement of Screw-Held Cable-Connected Modules.* Remove and replace a screw-held cable-connected module as follows:

WARNING

Dc/dc converters may be hot. Use caution when handling.

(1) Observe original installation of screw-held cable-connected module to determine whether electrical connections or attaching hardware should be disengaged first and proceed as follows:

WARNING

When high voltages are present, ensure that the operating power to the major assembly is turned off before proceeding. To turn off power, set the major assembly power control to its off position and then set its respective PCG switch(es) to off position (down) in accordance with table 3-11.

(a) Where electrical connections are accessible, determine if connectors can be disengaged without first withdrawing a module from major assembly chassis; if accessible, disconnect cable assemblies before releasing captive screws or removing attaching hardware.

(b) Release captive screws or remove attaching hardware (mounting screws, etc.) before disconnecting cable assembly from a connector (in cases where electrical connections are not readily accessible or connectors cannot be disengaged without partial removal of module from chassis).

(2) Remove faulty module from major assembly chassis, observing original routing of cable assembly.

(3) Position replacement module onto (or into) major assembly chassis, routing cable assembly on replacement module (or in the chassis) as observed during removal of faulty module.

(a) Connect cable assembly to corresponding connector on replacement module where electrical connections cannot be made following module installation; then secure installation with captive screws or other attaching hardware, as applicable.

(b) Install module, and secure installation with captive screws or other applicable attaching hardware; then install electrical connections in cases where access is available following module installation.

(4) Tag faulty module which is to be forwarded to supply and note defect problem.

3-47. Removal and Replacement of Indicator Lens. An indicator lens is removed and replaced according to the following procedures.

a. *Removal.* Remove an indicator lens as follows (fig. 3-18).

(1) Unscrew indicator lens counterclockwise until fully unfastened.

(2) Remove indicator lens.

(3) Remove lamp from indicator lens.

b. *Replacement.* To replace an indicator lens, perform the procedure in a. above in reverse sequence.

3-48. Removal and Replacement of Boot. A dust and moisture seal boot is removed and replaced according to the following procedures.

a. *Removal.* Remove a boot as follows (fig. 3-18):

(1) Unscrew indicator lens counterclockwise until fully unfastened.

(2) Remove indicator lens and lamp.

(3) Unscrew and remove boot.

b. *Replacement.* To replace a boot, perform the procedure in a. above in reverse sequence.

3-49. Removal and Replacement of Knobs. All knobs used on rotary switches and potentiometers are removed by loosening the set screws. Replacement is accomplished by first orienting the knob, so that one of the set screws will be tightened on the flat surface of the shaft, and then tightening all set screws.

3-50. Removal and Replacement of a Major Assembly from Case. A major assembly is removed and replaced according to the following procedures.

a. *Removal.* Remove a major assembly from the case as follows:

(1) Refer to paragraph 3-45a and perform procedure to extend major assembly from case.

(2) Refer to table 3-11 and turn off power to applicable major assembly by setting related switches to indicated positions.

(3) Disconnect all cable assemblies to major assembly.

(4) Press slide assembly locks that release the tracks from channel and slide major assembly out slightly (just far enough to retain spring-loaded locks in unlocked position); do not attempt to remove major assembly single-handed.

WARNING

To prevent injury to personnel and damage to the equipment, removal of major assemblies from their cases requires at least two men.

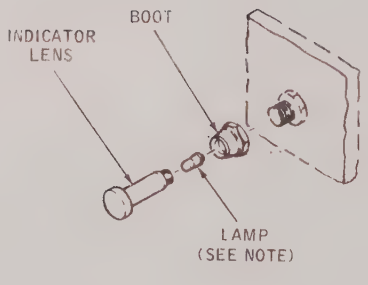

NOTE:

LAMP SHOWN FOR REFERENCE ONLY. REPLACEABLE AT OPERATOR MAINTENANCE LEVEL.

ELOAC029

Figure 3-18. Indicator Lens and Boot Typical Installation Details

(5) Remove major assembly from case.

b. *Replacement.* To replace a major assembly in the case, perform the procedure in a. above in reverse sequence.

3-51. Removal and Replacement of Case. A case is removed and replaced according to the following procedures.

a. *Removal.* Remove a case from shelter framework as follows:

(1) Refer to paragraph 3-50a and perform procedure to remove major assembly from case.

(2) Release captive bolts (typical quantity of four) which secure mounting brackets of case to shelter framework (fig. 3-16).

(3) Remove case from shelter framework

b. *Replacement.* To replace a case, perform the procedure in a. above in reverse sequence.

CHAPTER 4

COMPUTER ORGANIZATIONAL MAINTENANCE

Section I. TROUBLESHOOTING

4-1. Introduction. Organizational maintenance personnel are authorized to repair the major assemblies (CPU, IOU, and MCMUs) of the computer by replacing the items coded as replaceable at the organizational level (refer to RPSTL, appendix D, volume 4). Maintenance consists of isolating a fault to a replaceable component, subassembly, or circuit card; removing and replacing the faulty item; and verifying the repair of the major assembly. In addition, certain procedures for maintaining other major assemblies of the TACFIRE system are also applicable to the computer. These procedures, which are general in nature, are contained in chapter 3 and are referenced where applicable.

4-2. Troubleshooting Techniques. FI procedures are performed following detection of a computer malfunction (chapter 3). In some cases, the cause of trouble may be determined by visual inspection. In all other cases, a system initialization program load must be performed using the M&D computer FI test to isolate a faulty item.

4-3. Visual Inspection. Before initiating the M&D computer FI test, inspect the computer visually for obvious faults and indications of faults. Check for loose or incorrect cable connections, incorrect switch settings, and improperly seated circuit cards. Table 4-1 provides various fault indications, probable causes, and related corrective actions. Power faults can be detected by checking for lighted fault indicators on the IOU dc/dc converters and on the MCMU front panel. If a power fault is indicated (power fault lamp on, POWER ON lamp off, and/or dc/dc converter fault light on), recycle the power. If after recycling, the power fault indication is cleared, resume normal operation. If a power fault remains, initiate troubleshooting procedures.

4-4. Computer Tests. When the computer is malfunctioning and the cause of trouble cannot be determined by visual inspection, the operator must initiate a system initialization program load (volume 3 of the operator's manual). This activates the built-in self-test capability of the computer hardware. If the computer passes its own self test, the computer software test program will be run.

a. *Computer Hardware Self Test.* This self test verifies that the computer is capable of processing and loading the test program into its memory banks. The computer hardware self test is initiated by the first set of instructions in the test program. If the IOU and CPU are performing satisfactorily, all instructions in the first set of the test program are transferred to and executed by the CPU. When the self test is being performed, the DIAGNOSE STATUS indicators on the front panel of the CPU are lighted in a changing configuration. Should the self test detect a hardware (circuitry) malfunction, the DIAGNOSE STATUS indicators will indicate at which stage of the self test the malfunction was detected. When any of

Table 4-1. Computer Visual Troubleshooting

Fault indication	Probable cause	Corrective action
IOU		
FAULT COMPUTER indicator lights (RED).	Memory timeout, IOU timeout, or memory parity error.	Run computer FI test.
FAULT POWER indicator lights (RED), INT indicator on one or more dc/dc converter is lighted.	Faulty dc/dc converter.	Replace dc/dc converter(s) where INT indicator(s) are lighted.
FAULT SYSTEM indicator lights (RED).	Memory timeout, I/O timeout, I/O control timeout, program timeout, memory parity error, or I/O parity error.	Run computer FI test. Replace circuit cards as required.
MCMU		
FAULT POWER indicator lights (RED) and POWER ON indicator is off or all indicators off.	Faulty power supply.	Replace power supply.
OVER TEMP indicator lights (AMBER).	Overtemperature in core stack assembly.	Check to see if MCMU is being properly cooled. Ensure that transit case is clean and free of dust, and that air circulation is not obstructed. Check that shelter airconditioner is working properly.

600

the malfunction messages is displayed by the DIAGNOSE STATUS indicators on the CPU, the CPU STOPPED indicator on the IOU front panel will light to indicate a computer stop. Also, on the CPU front panel, the PROGRAM LOAD STATUS CPU indicator or the PROGRAM LOAD STATUS IOU indicator (or both) will remain lighted. (These PROGRAM LOAD STATUS indicators are lighted the moment the program load request is made by the operator.) Refer to volume 10 of the operator's manual (M&D fault catalog) for interpretation of the DIAGNOSE STATUS indicators. If the computer successfully completes its hardware self test, both PROGRAM LOAD STATUS indicators will go out.

b. *Computer Software Test.* When the computer passes the hardware self test, the PROGRAM LOAD STATUS indicators go off. This indicates that the test programs stored in the TTC or MTC are being loaded into the computer memory for processing by the CPU. The computer test program continues automatically until a faulty subassembly or group of subassemblies is disclosed by the software. Then, the CPU STOPPED indicator on the IOU front panel lights, and an FI message is provided. Refer to volume 10 of the operator's manual (M&D fault catalog) for interpretation of the FI message.

4-5. Fault Isolation. The FI message, as interpreted in the M&D fault catalog, may indicate that a trouble is located within circuit cards in the CPU, IOU, or MCMU, or a faulty memory core stack in the MCMU. Isolate faulty digital circuit card using the MTS as instructed in chapter 3 of this volume. Procedures for isolating a faulty analog circuit card are also provided in chapter 3.

4-6. CPU Troubleshooting. All of the circuit cards in the CPU are replaceable at the organizational level of maintenance. Troubleshooting the CPU begins with isolating the trouble to a group of circuit cards and then to individual faulty cards for replacement. To troubleshoot the CPU, perform the following:

a. Extend CPU out of case assembly (refer to chapter 3).

b. Perform system initialization program load (refer to volume 3 of operator's manual).

c. Observe DIAGNOSE STATUS lights on CPU front panel.

d. Observe condition of PROGRAM LOAD STATUS indicators on CPU front panel. Refer to applicable portion of M&D fault catalog in volume 10 of operator's manual for interpretation of fault code.

e. Determine from M&D fault catalog which group of circuit cards are listed as possible cause of trouble. Refer to appendix D, volume 4 for card location identification and proceed as follows:

(1) If suspected group consists of digital circuit cards, perform applicable FI procedure using MTS as described in chapter 3.

(2) If suspected group consists of analog circuit cards, perform applicable FI procedure as described in chapter 3.

f. Replace any faulty circuit card.

g. Repeat steps a thru f above until FI message does not indicate a fault in CPU.

4-7. IOU Troubleshooting. The IOU contains digital circuit cards, analog circuit cards, and three dc/dc converters. All of these are replaceable at the organizational level of maintenance. If power failure is indicated, begin troubleshooting by isolating the cause of trouble to the dc/dc converters. When a power fault is not indicated, isolate the trouble to a group or groups of circuit cards, then to individual faulty circuit cards. Troubleshoot the IOU as follows:

a. Extend IOU out of case assembly (refer to chapter 3).

b. If FAULT POWER indicator on the IOU front panel is lighted (RED), check INT indicators on dc/dc converters as follows:

(1) If INT indicator in any of the three dc/dc converters is lighted, replace that particular dc/dc converter (refer to chapter 3).

(2) If INT indicators are not lighted, continue this procedure.

c. Perform system initialization program load (refer to volume 3 of operator's manual).

d. Observe DIAGNOSE STATUS indicators on CPU front panel.

e. Observe condition of PROGRAM LOAD STATUS indicators on front panel of CPU. Refer to applicable section of M&D fault catalog in volume 10 of operator's manual for interpretation of fault code.

f. Using M&D fault catalog, determine which group of circuit cards are listed as possible cause of trouble. (Refer to appendix D, volume 4 for card location identification.) Proceed as follows:

(1) If suspected group consists of digital circuit cards, perform applicable FI procedure using MTS as described in chapter 3.

(2) If suspected group consists of analog circuit cards, perform applicable FI procedure as described in chapter 3.

g. Replace any faulty circuit card.

h. Repeat steps c thru g above until FI message does not indicate a fault in IOU.

4-8. MCMU Troubleshooting. The MCMU contains digital circuit cards, analog circuit cards, a core stack, and a power supply. All of these, except for core stack, are replaceable at the organizational level of maintenance. Begin troubleshooting the MCMU by isolating the cause of trouble to the power supply, if a power failure is indicated. If a power fault is not indicated, isolate the trouble to a group or groups of circuit cards, then to individual faulty circuit cards. Troubleshoot the MCMU as follows:

a. Extend MCMU out of case assembly (refer to chapter 3).

b. Check status of MCMU front-panel indicators as follows:

(1) If FAULT POWER indicator is lighted (RED), power supply is faulty. Replace power supply as instructed in section II of this chapter.

(2) If all indicators are out, press LAMP TEST switch on MCMU front panel. If FAULT indicators light, power supply is not faulty and PWR ON indicator is defective. If no indicators light, replace power supply.

c. Perform system initialization program load (refer to Volume 3 of operator's manual).

d. Observe DIAGNOSE STATUS indicators on CPU front panel.

e. Observe condition of PROGRAM LOAD STATUS indicators on CPU front panel. Refer to applicable portion of M&D fault catalog in volume 10 of operator's manual for interpretation of fault code.

f. Using M&D fault catalog, determine if a core stack is at fault. When a faulty core stack is indicated, contact DS maintenance.

g. Determine from M&D fault catalog if a group of circuit cards are listed as possible cause of trouble. Refer to appendix D, volume 4 for card location identification and proceed as follows:

(1) If suspected group consists of digital circuit cards, perform applicable FI procedure using MTS as described in chapter 3.

(2) If suspected group consists of analog circuit cards, perform applicable FI procedure described in chapter 3.

h. Replace any faulty circuit card.

i. Repeat steps b thru h until FI message does not indicate a fault in MCMU.

Section II. REPAIR

4-9. Introduction. This section consists of removal and replacement procedures for those items of the computer that organizational maintenance personnel are authorized to replace (refer to figure 4-1 for major assemblies of the computer). Authorized items are those with an O as the third character of the SMR code as shown in the RPSTL of appendix D, volume 4. Removal and replacement procedures for authorized items of the computer that are common to other major assemblies of the TACFIRE system are contained in chapter 3. Refer to chapter 3 for removal and replacement procedures for:

a. Extending and retracting major assembly from case assembly.

b. Removal and replacement of major assembly.

c. Removal and replacement of case assembly.

d. Removal and replacement of circuit cards.

e. Removal and replacement of dc/dc converters.

f. Removal and replacement of indicator lenses and boots.

g. Removal and replacement of lamps.

h. Removal and replacement of knobs.

WARNING

High voltages exist in the computer. DEATH ON CONTACT may result if personnel fail to observe safety precautions. To eliminate shock hazard when servicing the computer, turn off power by setting power switches at the IOU and MCMU to off position and then setting the following PCG switches to the off (down) position.

	AC PRIME POWER 270 VDC		AC OR DC PRIME PWR 28 VDC		DC PRIME PWR 270 VDC	
Major Unit	Bn	DivArty	Bn	DivArty	Bn	DivArty
IOU/CPU	(J1)	(J1)	(J1-J4)	(J1-J4)	(J1)	(J1)
MCMU A	(J3)	(J3)	(J1-J4)	(J1-J4)	(J3)	(J3)
MCMU B	(J4)	(J3)	(J1-J4)	(J1-J4)	(J4)	(J3)
MCMU C	(J4)	(J4)	(J1-J4)	(J1-J4)	(J4)	(J4)
MCMU D	–	(J4)	–	(J1-J4)	–	(J4)

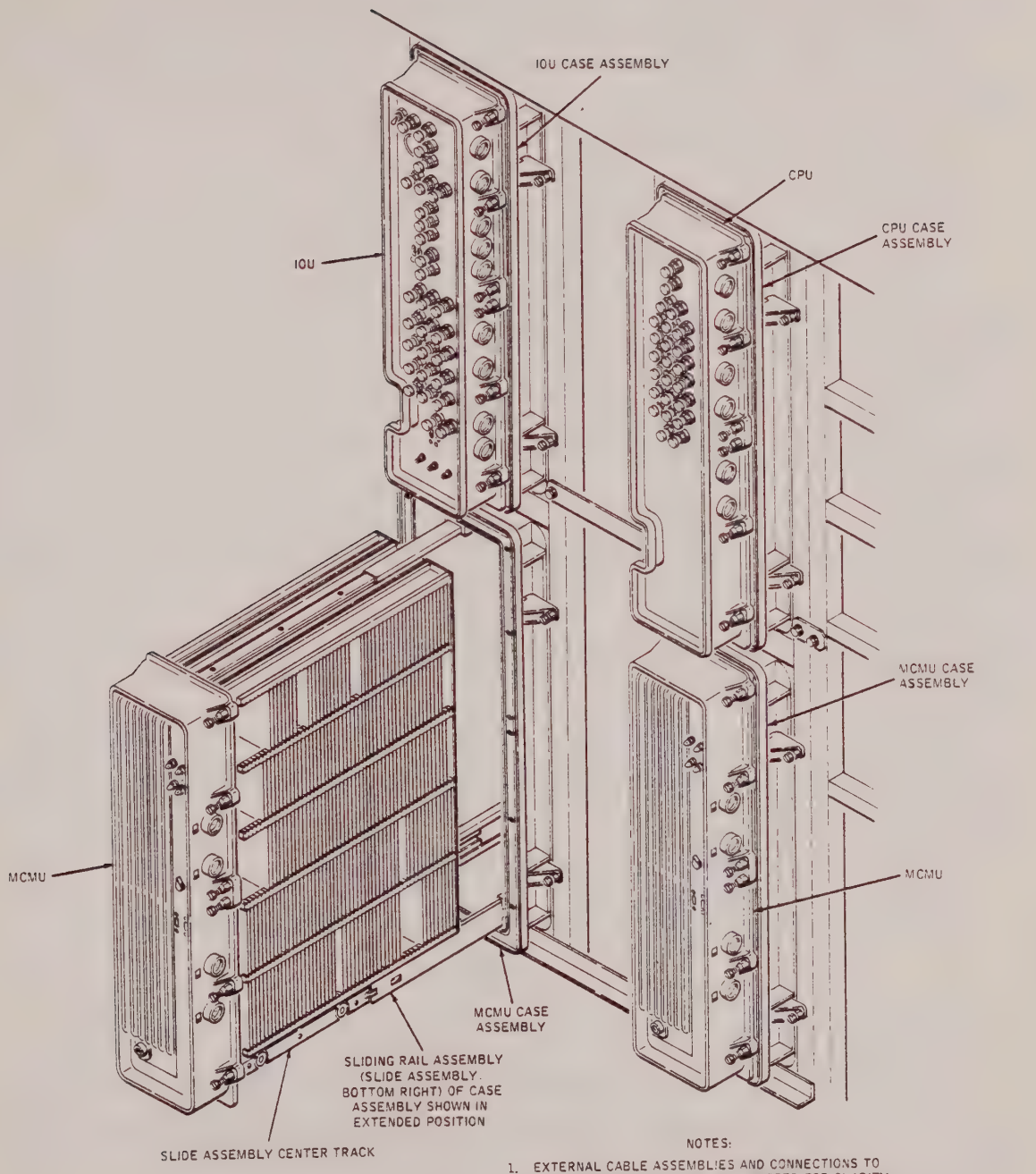

Figure 4-1. Computer Major Assemblies

4-10. CPU Repair. Removal and replacement procedures for components of the CPU not covered in chapter 3 are presented in the following paragraphs. See figure D-11 for CPU component location.

a. *Removal of Connector Shorting Cap.* To remove connector shorting cap (figure D-11, 11), proceed as follows:

(1) Deenergize CPU (refer to chapter 3).

(2) Extend CPU from transit case (refer to chapter 3).

(3) Remove CPU from transit case (refer to chapter 3).

(4) Disengage lanyard coupling by turning coupling ring counterclockwise, and, with same motion, pull connector shorting cap directly out from socket.

(5) Remove screw (7), flat washer (8) and nut (10) that secure shorting cap tether to front panel.

b. *Replacement of Connector Shorting Cap.* To replace connector shorting cap (11), perform the procedure in a. above in reverse sequence.

4-11. IOU Repair. Refer to chapter 3 for removal and replacement procedures for components of the IOU. In addition, refer to paragraph 4-10 for procedures to remove and replace the IOU, connector shorting cap (fig. D-13, 33).

4-12. MCMU Repair. Removal and replacement procedures for components of the MCMU not covered in chapter 3 are presented in the following paragraphs. See figure D-14 for MCMU component location.

a. *Removal of Power Supply.* Remove the power supply (fig. D-14, 1) from the MCMU as follows:

(1) Turn off power to applicable MCMU by setting MCMU and PCG switches to off (down) position as indicated in paragraph 4-9.

(2) Disconnect cable connected to connector J1 on power supply front panel (fig. 4-2).

(3) Loosen 18 captive screws that secure power supply to front panel of MCMU.

CAUTION

Use care not to overextend cable connected to J2 on rear of power supply during removal.

(4) Slide power supply out of front panel to gain access to connector J2 on rear of power supply.

(5) Loosen two screws that secure cable connector to J2 of power supply; disconnect cable connector from J2.

(6) Remove power supply and place on a secure, level surface.

b. *Replacement of Power Supply.* To replace the power supply, perform the procedure in a. above in reverse sequence.

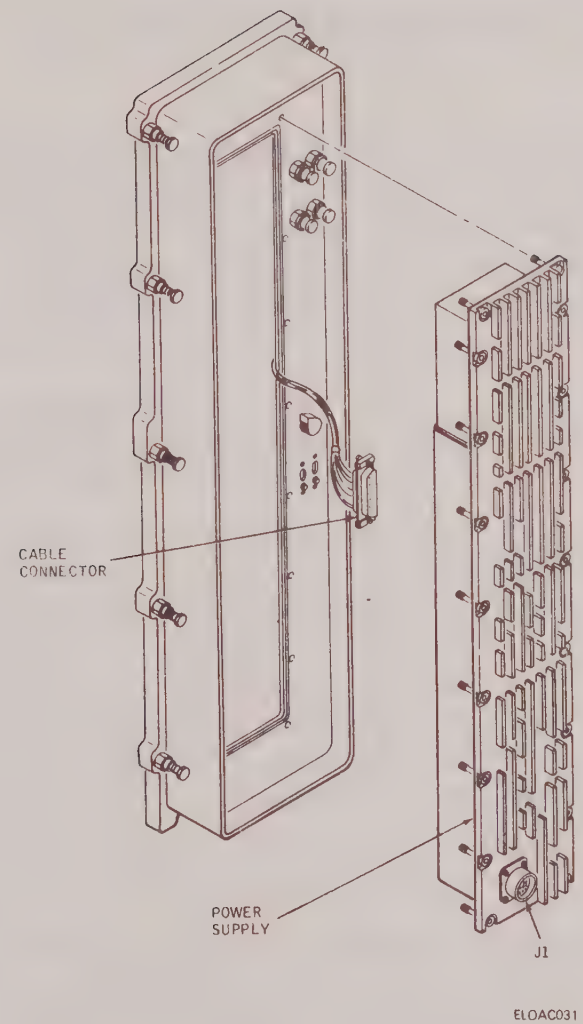

Figure 4-2. MCMU Power Supply Removal and Replacement

CHAPTER 5

AUXILIARY REMOVABLE MEDIA MEMORY ORGANIZATIONAL MAINTENANCE

Section I. TROUBLESHOOTING

5-1. Introduction. Organizational maintenance personnel are authorized to repair the ARMM by replacing the items coded as replaceable at the organizational level (refer to RPSTL, appendix D, volume 4). Maintenance consists of isolating a fault to a replaceable component, subassembly, or circuit card; removing and replacing the faulty item; and verifying the repair of the major assembly. In addition, certain procedures for maintaining other major assemblies of the TACFIRE system are also applicable to the ARMM. These procedures, which are general in nature, are contained in chapter 3 and are referenced where applicable.

5-2. Troubleshooting Techniques. FI procedures are performed following the detection of an ARMM malfunction (refer to chapter 3). In some cases, the cause of trouble may be determined by visual inspection. In all other cases, the M&D ARMM FI test must be run.

5-3. Visual Inspection. Before initiating the M&D FI test, visually inspect the ARMM for obvious faults and indications of faults. Check for loose or incorrect cable connections, incorrect switch settings, and improperly seated circuit cards. Power faults are indicated by fault indicators on the ARMM front panel and on the dc/dc converter. If a power fault is suspected (FAULT RESET indicator lighted, POWER indicator off, or dc/dc converter fault indicator lighted), recycle power. If fault indication is cleared, resume normal operation. If fault indication remains, initiate troubleshooting procedures. Refer to table 5-1 for a listing of corrective actions for various fault indications. Circuit card A2127 provides fault indicators for fault isolation to replaceable subassemblies. Perform lamp test on circuit card A2127 as follows:

a. Press TEST switch S1 on circuit card A2127. Check that fault indicators 1 through 7 are lighted. If indicators 1 through 7 fail to light, replace circuit card A2127.

b. If circuit card A2127 passes lamp test, release TEST switch S1 and press RESET switch S2.

5-4. Fault Isolation Using the M&D Program. If visual fault isolation procedures do not locate the faulty ARMM assembly, run the M&D ARMM FI program as follows:

CAUTION

Before running the M&D ARMM FI program, turn power off and install a write-enabled, blank TTC. Failure to comply will result in loss of recorded computer programs or salvage point recording (SPR) data.

a. Install a write-enabled, blank TTC.

Table 5-1. ARMM Visual Troubleshooting

Fault indication	Probable cause	Corrective action
FAULT RESET indicator on ARMM front panel is lighted (RED) and INT indicator on dc/dc converter also lighted.	Faulty dc/dc converter.	Replace dc/dc converter.
Neither the BOT or the EOT indicator on the front panel of the ARMM lights when FWD or REWIND switches are pressed.	Faulty command logic circuit card.	Replace command logic circuit card A2205.
Indicators 1 and 3 on card A2127 are lighted.	Faulty TTC assembly. Command logic read/write and/or voltage comparator circuit cards.	Replace: 1. TTC assembly. 2. Command logic circuit card A2205. 3. Read/write circuit cards A2207, A2208, and A2209. 4. Voltage comparator circuit card A2206.
Indicator 7 is lighted on card A2127.	Faulty oscillator and/or command logic circuit cards.	Replace: 1. Oscillator circuit card A2132. 2. Command logic circuit card A2205.
Indicator 5 is lighted on card A2127.	Faulty TTC assembly command logic circuit card assembly and/or motor drive circuit card.	Replace: 1. Command logic circuit card A2205. 2. Motor drive circuit card A2204.

604

b. Extend ARMM out of its case assembly.

c. From ACC or IOU, request M&D ARMM FI test (volume 9 of operator's manual).

d. Observe and interpret ELP printout or CPU front panel DIAGNOSE STATUS indicators to obtain M&D error stop number.

e. Use ARMM section of M&D fault catalog (volume 10 of operator's manual) to find error stop number and associated list of suspect digital and analog cards.

f. Isolate and replace faulty digital circuit card using MTS, or isolate and replace faulty analog circuit card (refer to chapter 3).

g. Repeat steps b thru f above until ELP printout or CPU front-panel indicators do not indicate a fault in the ARMM.

Section II. REPAIR

5-5. Introduction. This section consists of removal and replacement procedures for those items of the ARMM that organizational maintenance personnel are authorized to replace. Authorized items are those with an O as the third character of the SMR code as shown in the RPSTL of appendix D, volume 4. Removal and replacement procedures for authorized items of the ARMM that are common to other major assemblies of the TACFIRE system are contained in chapter 3. Refer to chapter 3 for the following procedures:

a. Extending and retracting major assembly from case assembly.

b. Removal and replacement of case assembly.

c. Removal and replacement of circuit cards.

d. Removal and replacement of dc/dc converter.

e. Removal and replacement of indicator lenses and boots.

f. Removal and replacement of lamps.

g. Removal and replacement of knobs.

WARNING

To eliminate shock hazard when servicing the ARMM, turn off power by first pressing the POWER switch to turn off the indicator and then setting the following PCG switches to their off position (down). Both ARMM-1 and ARMM-2 will be deenergized in the DivArty computer group.

AC PRIME POWER 270 VDC	AC OR DC PRIME PWR 28 VDC	DC PRIME PWR 270 VDC
(J2)	(J1-J4)	(J2)

5-6. Removal and Replacement Procedure for ARMM. The ARMM is removed and replaced according to the following procedure.

WARNING

To prevent injury to personnel and damage to equipment, removal and replacement of the ARMM must be performed by at least two men.

a. *Removal.* Remove the ARMM from its case assembly as follows:

(1) Disconnect cables from connectors J1 and J2 of ARMM.

(2) Release 12 captive screws (six on each ARMM or six on ARMM and six on blank panel assembly) that secure ARMMs (or ARMM and blank panel assembly) and slide assembly to transit case.

(3) Pull slide assembly from transit case until slide locks engage.

(4) Remove six hex-head nuts (3, fig. D-15 or D-44A) that secure ARMM (2) to slide assembly.

(5) Carefully slide ARMM out of slide assembly and place upright on a secure, level surface.

b. *Replacement.* To replace the ARMM in the transit case, perform the procedure in a above in reverse sequence.

CHAPTER 5A

MAGNETIC TAPE UNIT ORGANIZATIONAL MAINTENANCE

Section I. TROUBLESHOOTING

5A-1. Introduction. Organizational maintenance personnel are authorized to repair the MTU by replacing the items coded as replaceable at the organizational level (refer to RPSTL, appendix D, volume 4). Maintenance consists of isolating a fault to a replaceable component, subassembly, or circuit card; removing and replacing the faulty item; and verifying the repair of the major assembly. In addition, certain procedures for maintaining other major assemblies of the TACFIRE system are also applicable to the MTU. These procedures, which are general in nature, are contained in chapter 3 and are referenced where applicable.

CAUTION

Magnetic Tape Cartridge (MTC)

It is necessary to remove the MTC from the MTT to gain access to the file protect disc that is mounted on the rear of the MTC. Maintenance personnel are cautioned not to open the hinged rear cover of the MTC unless instructed to do so. When opening the MTC, it is likely that the operator will wipe his thumb across the recording tape, creasing the tape or smearing it badly, resulting in a shutdown of the computer. Organizational maintenance personnel shall use extreme care.

When removed from the MTT, the MTC may be damaged by rough handling, moisture, high temperature, or strong magnetic fields. Proper storage is provided in the FDC. The MTC should either be in place in the MTT, or it should be properly stored. Proper storage consists of (1) placing the MTC in a dust-resistant, plastic parts bag or envelope; (2) placing the bagged MTC in its shock-resistant, plastic carrying case; and (3) placing the cased MTC in its proper storage location in the FDC.

5A-2. Troubleshooting Techniques. FI procedures are performed following the detection of an MTU malfunction (refer to chapter 3). In some cases, the cause of trouble may be determined by visual inspection. In all other cases, the M&D ARMM FI test must be run on the MTU. In certain situations, the M&D ARMM FI test cannot be run (for example, when an MTU failure occurs during program load). If the M&D ARMM FI test cannot be run, follow the procedure in paragraph 5A-5.

NOTE

The problem with MTU failure during program load involves only the Battalion system. The DivArty system has two MTUs, one of which should be operational.

5A-3. Visual Inspection. Before initiating the M&D FI test, visually inspect the MTU for obvious faults and indications of faults as follows:

WARNING

High voltages are present in the MTU. DEATH ON CONTACT may result if personnel fail to observe safety precautions.

a. Check for loose or incorrect cable connections.

b. Check for incorrect switch settings.

c. Check for improperly seated circuit cards.

d. Check fault indicators (FAULT RESET indicator, dc/dc converter fault indicators).

NOTE

The MTU must be in the off-line mode before the TEST, FORWARD, and REWIND switches are pressed.

e. Check for proper operation of front panel switches.

f. Perform lamp test and check that front panel indicators light.

g. Install MTC containing pre-recorded data (if not already installed). Place MTU in off-line mode. Rewind tape to BOT. Press and release TEST switch. TEST and FORWARD indicators should light and remain on until test action is complete (one record of data is read from tape). If an error is detected, FAULT RESET indicator will light. (To reset fault indication, press FAULT RESET switch and observe that FAULT RESET indicator goes off.) Some faults will prevent the test circuitry from functioning properly. In such cases, it is possible that the TEST indicator will remain on and the tape will not move forward.

h. Check that PCG circuit breakers associated with MTU are set to on position.

i. Carefully open hinged rear cover on MTC and check if tape is broken, damaged, bunched up, or off spool.

Refer to table 5A-1 for a listing of corrective actions for various fault indications. If a power fault is suspected (FAULT RESET indicator lighted, POWER indicator off, or a dc/dc converter fault indicator lighted), recycle power. If the fault indication is cleared, resume normal operation. If the fault indication remains, initiate the M&D FI test.

5A-4. Fault isolation Using the M&D Program. If visual fault isolation procedures do not isolate the faulty MTU assembly, run the M&D ARMM FI program as follows:

CAUTION

Before running the M&D ARMM FI program, turn power off and install a write-enabled, blank MTC. Failure to comply will result in loss of recorded computer programs or salvage point recording (SPR) data.

Table 5A-1. MTU Visual Troubleshooting

Fault indication	Corrective action	Comments
	NOTE Unless otherwise indicated, all switches and indicators called out are those mounted on the MTU front panel. When reference is made to MTT controls and indicators, they are accessible by opening door on front of MTT.	
FAULT RESET indicator is on, POWER indicator is off, and/or fault indicator on dc/dc converter is on.	a. Recycle power. b. If FAULT RESET indicator is still on, replace dc/dc converter and recheck fault symptom. c. If FAULT RESET indicator is still on, contact DS maintenance to isolate short circuit in MTU.	A power fault may be indicated by: a. POWER indicator off. b. INT or EXT fault indicator on dc/dc converter on. c. Both a and b above.
FAULT RESET indicator is on and device timeout occurs.	a. Remove MTC and replace with write-enabled, blank MTC. b. Run MTU fault isolation program and perform actions associated with fault stop. c. If MTU fault isolation program runs fault free, original tape may be faulty. Replace original MTC and attempt to clear fault.	Refer to IOU maintenance and status control panel for device timeout indication.
All MTU front panel indicators are off, and circuit breaker associated with MTU on PCG front panel is tripped.	a. Recycle PCG circuit breaker. b. If circuit breaker trips again, disconnect power input cable to MTU and recycle circuit breaker. (1) If circuit breaker trips again, fault is in PCG or power cable. Perform organizational maintenance on PCG. (2) If circuit breaker does not trip, fault is in MTU. Perform following actions: (a) Replace MTU power supply, reconnect power input cable to MTU, and recycle PCG circuit breaker.	

740-1

Table 5A-1. MTU Visual Troubleshooting – Continued

Fault indication	Corrective action	Comments
	(b) If PCG circuit breaker trips, contact DS maintenance to isolate short in MTU.	
All MTU front panel indicators are off, and circuit breaker associated with MTU on PCG front panel is not tripped.	a. Press power switch and try to turn MTU power on. b. If unable to turn power on, replace MTU power supply. c. If all indicators are still off, contact DS maintenance to isolate failure to associated wiring, subassembly, or indicator.	Unit may have been inadvertently turned off. Attempt to restore power before attempting further troubleshooting.
MTT circuit breaker tripped.	a. Recycle MTT circuit breaker. b. If circuit breaker still trips, remove circuit card A1 from its slot in MTT and recycle circuit breaker. (1) If circuit breaker does not trip, replace circuit card A1. (2) If circuit breaker trips, continue procedure for circuit cards A2 through A5. c. If circuit breaker still trips after cards A1 through A5 have all been removed, contact DS maintenance to isolate short in MTT.	Check MTC before performing corrective action. If tape is damaged, use that as fault indication.
Unable to turn on power to MTU when POWER switch is pressed.	a. Replace MTU power supply and try to turn on MTU power again. b. If still unable to turn on power, contact DS maintenance to isolate failure to associated wiring or switch-indicator.	When POWER switch is pressed, POWER lamp should light and unit should be operational. Front panel switch functions should work and front panel indicators should light when LAMP TEST switch is pressed.

740-2

Table 5A-1. MTU Visual Troubleshooting – Continued

Fault indication	Corrective action	Comments
Unable to turn off power to MTU when POWER switch is pressed.	a. Replace MTU power supply. Turn on power to MTU, then try to turn off MTU power. b. If still unable to turn off power, contact DS maintenance to isolate failure to associated wiring or switch-indicator.	With MTU power on, POWER indicator should go off when POWER switch is pressed.
MTU self-test fails when TEST switch is pressed (refer to paragraph 5A-3 g).	a. Press FAULT RESET switch to reset fault indication. Observe that FAULT RESET indicator goes off. b. Repeat self-test. c. If self-test fails again, reset fault indication. Run MTU fault isolation program and perform actions associated with fault stop. d. If self-test (performed in b above) passes, perform following steps: (1) Check read/write heads. If dirty, clean heads and resume normal operation. (2) If read/write heads are not dirty, tape may have parity errors. Replace MTC and resume normal operation.	For self-test to function properly, MTU must be in off-line mode and MTU must have an MTC with prerecorded data installed. When TEST switch is pressed and released, TEST and FORWARD indicators should light and remain on until test action is complete. If an error is detected, either FAULT RESET indicator lights or TEST indicator remains on (and tape fails to move forward).
Lamp test fails; only one indicator fails to light.	a. Replace indicator lamp and retest. b. If lamp still fails to light, replace following circuit cards one at a time and retest after each interchange: A1105, A1113, A1114. c. If lamp still fails to light, contact DS maintenance to isolate failure to associated wiring or indicator.	When LAMP TEST switch is pressed, all MTU front panel indicators should light.

740-3

Table 5A-1. MTU Visual Troubleshooting – Continued

Fault indication	Corrective action	Comments
Lamp test fails; more than one indicator fails to light.	a. Replace following circuit cards one at a time and retest after each interchange: A1105, A1113, A1114, A1115, A1135, A1217. b. If indicators still fail to light, contact DS maintenance to isolate failure to associated wiring or indicator.	Same as above.
MTC tape is run off reel or is otherwise damaged.	a. Replace circuit cards A4 and A5 in MTT. Insert new MTC and move tape using manual FORWARD and manual REWIND controls. b. If new MTC also becomes damaged, contact DS maintenance to isolate failure in MTT.	MTU must be in off-line mode when FORWARD and REWIND switches are pressed.
BOT indicator is off when tape is at BOT, and does not light during lamp test.	a. Replace indicator lamp and retest. b. If lamp still fails to light, replace following circuit cards one at a time and retest after each interchange: A1105, A1113, A1114. c. If lamp still fails to light, contact DS maintenance to isolate failure to associated wiring or indicator.	Tape is at BOT when tape can be seen in MTC window and tape marker is visible when hinged rear cover on MTC is opened.
BOT indicator is off when tape is at BOT, but lights during lamp test.	a. Tape may have run past BOT marker. Press FORWARD switch and allow tape to advance for 5 seconds. Cycle MTU power and press REWIND switch. b. If BOT indicator does not light within 10 seconds, perform following steps: (1) Open MTT door and check BOT indicator on MTT. (2) If BOT indicator on MTT is lighted, run MTU fault isolation program and perform actions associated with fault stop. If fault isolation program runs fault free, replace the following cards one at a time and attempt to clear fault after each interchange: A1105, A1113, A1114.	Same as above. MTU must be in off-line mode when FORWARD and REWIND switches are pressed. 740-4

Table 5A-1. MTU Visual Troubleshooting – Continued

Fault indication	Corrective action	Comments
	(3) If BOT indicator on MTT is not lighted, perform following steps: (a) Replace MTT circuit cards A4 and A5 one at a time and recheck fault indication after each interchange. (b) If MTT and MTU front panel BOT indicators both still do not light, run MTU fault isolation program and perform actions associated with fault stop.	
BOT indicator lights when tape is not at BOT.	a. Open MTT door and check BOT indicator on MTT. b. If BOT indicator on MTT is not lighted, press REWIND switch on MTT until BOT indicator on MTT lights. Then, run MTU fault isolation program and perform actions associated with fault stop. c. If BOT indicator on MTT also is lighted, perform following steps: (1) Replace MTT circuit cards A4 and A5 one at a time and recheck fault indication after each interchange. (2) If MTT and MTU front panel BOT indicators are still lighted, perform following steps: (a) Remove MTC and install write-enabled, blank MTC. (b) Press REWIND switch on MTT for no more than 2 minutes. (c) Remove MTC and verify that tape is at BOT. Tape is at BOT when tape can be seen in MTC window and tape marker is visible when hinged rear cover on MTC is opened. If a punched hole is visible in tape, then tape has run past BOT.	BOT indicator should not be lighted if tape marker is not visible when hinged rear cover on MTC is opened. MTU must be in off-line mode when FORWARD and REWIND switches are pressed.

740-5

Table 5A-1. MTU Visual Troubleshooting – Continued

Fault indication	Corrective action	Comments
	(d) If BOT is not verified, rewind tape or run tape forward as necessary to reach BOT. (e) When BOT is verified by visual inspection, run MTU fault isolation program and perform actions associated with fault stop.	
EOT indicator is off when tape is at EOT, and does not light during lamp test.	a. Replace indicator lamp and retest. b. If lamp still fails to light, replace following circuit cards one at a time and retest after each interchange: A1105, A1113, A1114. c. If lamp still fails to light, contact DS maintenance to isolate failure to associated wiring or indicator.	Tape is at EOT when tape cannot be seen in MTC window and tape marker is visible when hinged rear cover on MTC is opened.
EOT indicator is off when tape is at EOT, but lights during lamp test.	a. Tape may have run past EOT marker. Press REWIND switch and allow tape to rewind for 5 seconds. Cycle MTU power and press FORWARD switch. b. If EOT indicator does not light within 10 seconds, perform following steps: (1) Open MTT door and check EOT indicator on MTT. (2) If EOT indicator on MTT is lighted, run MTU fault isolation program and perform actions associated with fault stop. (3) If EOT indicator on MTT is not lighted, perform following steps: (a) Replace MTT circuit cards A4 and A5 one at a time and recheck fault indication after each interchange.	Same as above. MTU must be in off-line mode when FORWARD and REWIND switches are pressed.

740-6

Table 5A-1. MTU Visual Troubleshooting – Continued

Fault indication	Corrective action	Comments
	(b) If MTT and MTU front panel EOT indicators both still do not light, run MTU fault isolation program and perform actions associated with fault stop.	
EOT indicator lights when tape is not at EOT.	Run MTU fault isolation program and perform actions associated with fault stop.	EOT indicator should not be lighted if tape marker is not visible when hinged rear cover on MTC is opened.
READY indicator is off when unit is on-line, and does not light during lamp test.	a. Replace indicator lamp and retest. b. If lamp still fails to light, replace following circuit cards one at a time and retest after each interchange: A1105, A1113, A1114. c. If lamp still fails to light, contact DS maintenance to isolate failure to associated wiring or indicator.	
READY indicator is off when unit is on-line, but lights during lamp test.	Run MTU fault isolation program and perform actions associated with fault stops.	
READY indicator lights when unit is off-line, but fault isolation program runs fault free.	a. Replace following circuit cards one at a time and recheck fault indication after each interchange: A1105, A1113, A1114. b. If fault is still present, contact DS maintenance to isolate failure to associated wiring or indicator.	Run MTU fault isolation program as first step in troubleshooting.
READY indicator lights when unit is off-line, and fault isolation program fails.	Perform actions associated with fault stops.	Run MTU fault isolation program as first step in troubleshooting.
ON-LINE indicator is always off.	a. Replace indicator lamp and retest. b. If lamp still fails to light, contact DS maintenance to isolate failure to associated wiring or indicator.	

740-7

Table 5A-1. MTU Visual Troubleshooting – Continued

Fault indication	Corrective action	Comments
ON-LINE indicator is always lighted.	a. Replace card A1105. b. If lamp still fails to turn off, contact DS maintenance to isolate failure to associated wiring or indicator.	
WRITE ENABLE indicator is off when tape is not protected, and does not light during lamp test.	a. Replace indicator lamp and retest. b. If lamp still fails to light, replace following circuit cards one at a time and retest after each interchange: A1105, A1113, A1114. c. If lamp still fails to light, contact DS maintenance to isolate failure to associated wiring or indicator.	
WRITE ENABLE indicator is off when tape is not protected, but lights during lamp test.	Run MTU fault isolation program and perform actions associated with fault stop.	
WRITE ENABLE indicator is on when tape is protected, but fault isolation program runs fault free.	a. Replace following circuit cards one at a time and recheck fault indications after each interchange: A1105, A1113, A1114. b. If fault is still present, contact DS maintenance to isolate failure to associated wiring or indicator.	Run MTU fault isolation program as first step in troubleshooting.
WRITE ENABLE indicator is on when tape is protected, and fault isolation program fails.	Perform actions associated with fault stop.	Same as above.
REWIND indicator is on when tape is not rewinding, but fault isolation program runs fault free.	a. Replace following circuit cards one at a time and recheck fault indication after each interchange: A1105, A1113, A1114. b. If fault is still present, contact DS maintenance to isolate failure to associated wiring or indicator.	Same as above.

740-8

Table 5A-1. MTU Visual Troubleshooting – Continued

Fault indication	Corrective action	Comments
REWIND indicator is on when tape is not rewinding, and fault isolation program fails.	Perform actions associated with fault stop.	Same as above.
REWIND indicator is off when tape is rewinding, and does not light during lamp test.	a. Replace indicator lamp and retest. b. If lamp still fails to light, replace following circuit cards one at a time and retest after each interchange: A1105, A1113, A1114. c. If lamp still fails to light, contact DS maintenance to isolate failure to associated wiring or indicator.	MTU must be in off-line mode when REWIND switch is pressed. REWIND function is working when capstan motor is heard running and BOT is reached within 2 minutes after REWIND switch is pressed.
REWIND indicator is off when tape is rewinding, but lights during lamp test.	Run MTU fault isolation program and perform actions associated with fault stop.	Same as above.
Tape does not rewind when REWIND switch is pressed, but fault isolation program runs fault free; FORWARD and TEST switches function properly.	a. Replace following circuit cards one at a time and recheck fault indication after each interchange: A1213, A1214, A1221, A1222, A1223, A1224, A1225, A1229. b. If fault is still present, contact DS maintenance to isolate failure to associated wiring or switch-indicator.	MTU must be in off-line mode when REWIND, FORWARD, and TEST switches are pressed. Run MTU fault isolation program as first step in troubleshooting. Rewind function does not work when capstan motor cannot be heard running and BOT cannot be reached within 2 minutes.
Tape does not rewind when REWIND switch is pressed, but fault isolation program runs fault free; FORWARD and TEST switches do not function properly.	a. Replace following circuit cards one at a time and recheck fault indications after each interchange: A1114, A1115, A1117, A1118, A1119, A1222, A1223, A1224, A1225, A1227, A1229. b. If fault is still present, contact DS maintenance to isolate failure to associated wiring.	Same as above.
Tape does not rewind when REWIND switch is pressed, and fault isolation program fails.	Perform actions associated with fault stop.	Same as above. 740-9

Table 5A-1. MTU Visual Troubleshooting - Continued

Fault indication	Corrective action	Comments
FORWARD indicator lights when tape is not moving forward, but fault isolation program runs fault free.	a. Replace following circuit cards one at a time and recheck fault indication after each interchange: A1105, A1113, A1114. b. If fault is still present, contact DS maintenance to isolate failure to associated wiring or switch-indicator.	Run MTU fault isolation program as first step in troubleshooting.
FORWARD indicator lights when tape is not moving forward, and fault isolation program fails.	Perform actions associated with fault stop.	Same as above.
FORWARD indicator is off when tape is moving forward, and does not light during lamp test.	a. Replace indicator lamp and retest. b. If lamp still fails to light, replace following circuit cards one at a time and retest after each interchange: A1105, A1113, A1114. c. If lamp still fails to light, contact DS maintenance to isolate failure to associated wiring or switch indicator.	MTU must be in off-line mode when FORWARD switch is pressed. Forward function is working when capstan motor is heard running and EOT is reached within 4 minutes after FORWARD switch is pressed.
FORWARD indicator is off when tape is moving forward, but lights during lamp test.	Run MTU fault isolation program and perform actions associated with fault stop.	Same as above.
Tape does not move forward when FORWARD switch is pressed, but fault isolation program runs fault free; REWIND and TEST switches function properly.	a. Replace following circuit cards one at a time and recheck fault indication after each interchange: A1114, A1115, A1213, A1214, A1222, A1223, A1224, A1225. b. If fault is still present, contact DS maintenance to isolate failure to associated wiring or switch-indicator.	MTU must be in off-line mode when FORWARD, REWIND, and TEST switches are pressed. Run MTU fault isolation program as first step in troubleshooting. Forward function does not work when capstan motor cannot be heard running and EOT cannot be reached within 2 minutes.
Tape does not move forward when FORWARD switch is pressed, but fault isolation program runs fault free; REWIND and TEST switches do not function properly.	a. Replace following circuit cards one at a time and recheck fault indications after each interchange: A1114, A1115, A1117, A1118, A1119, A1222, A1223, A1224, A1225, A1227, A1229.	Same as above.

740-10

Table 5A-1. MTU Visual Troubleshooting – Continued

Fault indication	Corrective action	Comments
	b. If fault is still present, contact DS maintenance to isolate failure to associated wiring.	
Tape does not move forward when FORWARD switch is pressed, and fault isolation program fails.	Perform actions associated with fault stop.	Same as above.
TEST indicator lights when unit is not being self-tested.	a. Replace following circuit cards one at a time and recheck fault indication after each interchange: A1105, A1113, A1114. b. If fault is still present, contact DS maintenance to isolate failure to associated wiring or switch-indicator.	
TEST indicator does not light when self-test is performed (TEST switch pressed), and does not light during lamp test.	a. Replace indicator lamp and retest. b. If lamp still fails to light, replace following circuit cards one at a time and retest after each interchange: A1105, A1113, A1114. c. If lamp still fails to light, contact DS maintenance to isolate failure to associated wiring or switch-indicator.	MTU must be in off-line mode when TEST, FORWARD, and REWIND switches are pressed.
TEST indicator does not light when self-test is performed (TEST switch pressed), but lights during lamp test; FORWARD and REWIND switches function properly.	a. Replace following circuit cards one at a time and recheck fault indication after each interchange: A1113, A1114, A1213, A1214, A1221, A1222, A1223, A1224, A1225, A1229. b. If fault is still present, contact DS maintenance to isolate failure to associated wiring or switch-indicator.	Same as above.
TEST indicator does not light when self-test is performed (TEST switch pressed), but lights during lamp test; FORWARD and REWIND switches do not function properly.	a. Replace following circuit cards one at a time and recheck fault indications after each interchange: A1114, A1115, A1117, A1118, A1119, A1222, A1223, A1224, A1225, A1227, A1229.	Same as above.

740-11

Table 5A-1. MTU Visual Troubleshooting – Continued

Fault indication	Corrective action	Comments
	b. If fault is still present, contact DS maintenance to isolate failure to associated wiring.	
Tape does not rewind when RWND switch on MTT is pressed.	a. Replace MTT circuit cards A4 and A5 one at a time and recheck fault indication after each interchange. b. If fault is still present, contact DS maintenance to isolate failure in MTT.	Rewind function does not work when capstan motor cannot be heard running and BOT cannot be reached within 2 minutes. RWND switch on MTT is not normally used when MTT is installed in MTU.
BOT indicator on MTT does not light when tape is at BOT.	a. Replace indicator lamp (led) and recheck fault indication. b. If fault is still present, replace MTT circuit cards A4 and A5 one at a time. Recheck fault indication after each interchange. c. If fault is still present, contact DS maintenance to isolate failure in MTT.	Tape is at BOT when tape can be seen in MTC window and tape marker is visible when hinged rear cover on MTC is opened.
BOT indicator on MTT lights when tape is not at BOT.	a. Replace MTT circuit cards A4 and A5 one at a time and recheck fault indication after each interchange. b. If fault is still present, contact DS maintenance to isolate failure in MTT.	BOT indicator should not be lighted if tape marker is not visible when hinged rear cover on MTC is opened.
EOT indicator on MTT does not light when tape is at EOT.	a. Replace indicator lamp (led) and recheck fault indication. b. If fault is still present, replace MTT circuit cards A4 and A5 one at a time and recheck fault indication after each interchange. c. If fault is still present, contact DS maintenance to isolate failure in MTT.	Tape is at EOT when tape cannot be seen in MTC window and tape marker is visible when hinged rear cover on MTC is opened.

740-12

Table 5A-1. MTU Visual Troubleshooting – Continued

Visual indication	Corrective action	Comments
EOT indicator on MTT lights when tape is not at EOT.	a. Replace MTT circuit cards A4 and A5 one at a time and recheck fault indication after each interchange. b. If fault is still present, contact DS maintenance to isolate failure in MTT.	EOT indicator should not be lighted if tape marker is not visible when hinged rear cover on MTC is opened.

740-13

a. Install a write-enabled, blank MTC.

b. Extend MTU out of case assembly.

NOTE

Before running the M&D ARMM FI program, ensure that the blank, write-enabled MTC has the tape at BOT. If the tape is not at BOT, place the MTU in the off-line mode and press REWIND switch on the MTU front panel. The BOT indicator should light within two minutes after rewind was initiated. The tape can also be rewound to BOT by pressing the MTT REWIND switch (inside the MTT access door).

c. From ACC or IOU, request M&D ARMM FI test (volume 9 of operator's manual).

NOTE

When the ARMM FI test is requested, the computer automatically decides whether to run the ARMM FI or MTU FI test, depending on which unit is installed.

d. Observe and interpret ELP printout or CPU front panel DIAGNOSE STATUS indicators to obtain M&D error stop number.

NOTE

If the M&D ARMM FI program runs fault free, the fault is in the original MTC with the recorded computer programs or SPR data (not the write-enabled, blank MTC used with the M&D ARMM FI program). Replace the original MTC.

e. Use MTU section of M&D fault catalog (volume 10 of operator's manual) to find error stop number and associated list of suspect digital and analog cards.

f. Isolate and replace faulty digital circuit card using MTS, or isolate and replace faulty analog circuit card (refer to chapter 3).

g. Repeat steps b thru f above until ELP printout or CPU front-panel indicators do not indicate a fault in MTU.

5A-5. Fault Isolation When M&D Program Cannot be Run. If visual fault isolation procedures do not isolate the faulty MTU item and the M&D ARMM FI program cannot be run, perform the following procedure.

a. Replace MTU analog circuit cards one at a time. Attempt to clear fault after each card replacement.

b. If fault is not among analog cards, test all digital circuit cards using MTS. Replace any faulty circuit card and attempt to clear the fault.

c. If fault is not among digital or analog circuit cards, replace dc/dc converter.

d. If above actions still do not isolate fault, replace MTC.

e. If fault remains, contact DS maintenance for assistance.

Section II. REPAIR

5A-6. Introduction. This section consists of removal and replacement procedures for those items of the MTU that organizational maintenance personnel are authorized to replace. Authorized items are those with an O as the third character of the SMR code as shown in the RPSTL of appendix D, volume 4. Removal and replacement procedures for authorized items of the MTU that are common to other major assemblies of the TACFIRE system are contained in chapter 3. Refer to chapter 3 for the following procedures:

a. Extending and retracting major assembly from case assembly.

b. Removal and replacement of case assembly.

c. Removal and replacement of MTU circuit cards.

d. Removal and replacement of dc/dc converter.

e. Removal and replacement of indicator lenses and boots.

f. Removal and replacement of lamps.

g. Removal and replacement of knobs.

WARNING

To eliminate shock hazard when servicing the MTU, turn off power by first pressing the POWER switch to turn off the indicator and then setting the following PCG switches to their off position (down). Both MTU-1 and MTU-2 will be deenergized in the DivArty computer group.

AC PRIME POWER 270 VDC	AC OR DC PRIME PWR 28 VDC	DC PRIME PWR 270 VDC
(J2)	(J1–J4)	(J2)

5A-7. Removal and Replacement Procedure for MTU. The MTU is removed and replaced according to the following procedure.

WARNING

To prevent injury to personnel and damage to equipment, removal and replacement of the MTU must be performed by at least two men.

a. *Removal.* Remove the MTU from its case assembly as follows:

(1) Disconnect cables from connectors J1 and J2 of MTU.

(2) Release 12 captive screws (six on each MTU, or six on MTU and six on blank panel assembly) that secure MTUs (or MTU and blank panel assembly) and slide assembly to transit case.

(3) Pull slide assembly from transit case until slide locks engage.

(4) Remove six hex-head nuts (3, fig. D-15A or D-44B) that secure MTU (2) to slide assembly.

(5) Carefully slide MTU out of slide assembly and place upright on a secure, level surface.

b. *Replacement.* To replace the MTU in the transit case, perform the procedure in a above in reverse sequence.

5A-8. Removal and Replacement Procedure for MTC. The MTC (41A, fig. D-16A) is removed and replaced according to the following procedure.

a. *Removal.* Remove the MTC from the MTT as follows:

(1) Release two captive wing fasteners on MTT access door and open door.

(2) Grasp knurled knob on left side of cartridge access slot with thumb and forefinger, and pull knob toward you on its slide until it stops.

CAUTION

In the next step, do not force the locking lever past the level, horizontal position.

(3) Using knob, lower locking lever to horizontal position.

(4) Pull knob directly toward you until spring-loaded latch arrests locking yoke linkage.

NOTE

A click is usually heard when the locking mechanism is arrested in the open position.

(5) Lower locking lever below horizontal position until it stops.

NOTE

The ejector mechanism will now push the MTC partially out of the access slot.

(6) Grasp MTC with thumb and forefinger and gently slide it out of access slot. When MTC is sufficiently clear of slot, grasp firmly with entire hand and remove from MTT.

(7) Immediately place MTC in proper storage for protection from contamination.

b. *Replacement.* To replace the MTC in the MTT, proceed as follows:

(1) Release two captive wing fasteners on MTT access door and open door.

(2) Grasp knurled knob on left side of cartridge access slot with thumb and forefinger, and pull knob toward you on its slide until it stops.

CAUTION

In the next step, do not force the locking lever past the level, horizontal position.

(3) Using knob, move locking lever to horizontal position.

(4) Pull knob toward you and to your left and down until spring-loaded latch arrests locking yoke linkage.

NOTE

If not previously arrested, a click is usually heard when the locking mechanism is arrested in the open position.

(5) Lower locking lever below horizontal position until it stops.

(6) With arrow on MTC pointing up, gently slide MTC (hinged cover first) into access slot until a definite click is heard and knob snaps in, indicating that locking mechanism has engaged MTC.

(7) Raise knob until a click is heard, indicating that locking lever is engaged, then push knob in on its slide until it stops.

(8) Close MTT access door and secure with captive wing fasteners.

5A-9. Removal and Replacement Procedure for MTT Circuit Cards. The MTT circuit cards (33, 34, and 35, fig. D-16A) are removed and replaced according to the following procedure.

a. *Removal.* Remove circuit cards from the MTT as follows:

(1) Extend MTU from transit case (refer to chapter 3).

(2) Pull out on ejector clips at top and bottom of circuit card to release card.

(3) Slide circuit card out of MTT.

b. *Replacement.* To replace circuit cards in the MTT, proceed as follows:

(1) Carefully slide circuit card into MTT and ensure that connectors properly mate.

(2) Secure circuit card in place by pressing firmly on ejector clips.

(3) Retract MTU into transit case and secure (refer to chapter 3).

CHAPTER 6

DIGITAL DATA TERMINAL ORGANIZATIONAL MAINTENANCE

Section I. TROUBLESHOOTING

6-1. Introduction. Organizational maintenance personnel are authorized to repair the DDT by replacing the items coded as replaceable at the organizational level (refer to RPSTL, appendix D, volume 4). Maintenance consists of isolating a fault to a replaceable component, subassembly, or circuit card; removing and replacing the faulty item; and verifying the repair of the major assembly. In addition, certain procedures for maintaining other major assemblies of the TACFIRE system are also applicable to the DDT. These procedures, which are general in nature, are contained in chapter 3 and are referenced where applicable.

6-2. Troubleshooting Techniques. FI procedures are performed following detection of a DDT malfunction (refer to para 6-4). In some cases, the cause of trouble may be determined by visual inspection. In all other cases, the DDT troubleshooting procedure must be performed.

NOTE

There is no M&D FI program for the DDT.

6-3. Visual Inspection. Inspect the DDT visually for obvious faults and indications of faults. Check for loose or incorrect cable connections, incorrect switch settings, and improperly seated circuit cards. The two FAULT ISOLATION switches are not to be used at the organizational maintenance level. Ensure that both switches are always set to the OFR position. Power faults are indicated by the INT fault indicator on the dc/dc converter. If a power fault is suspected, recycle power. If the fault indication is cleared, resume normal operation. If the fault indication remains, start troubleshooting procedures.

6-4. Troubleshooting Procedures. When a DDT fails, troubleshoot by replacing the dc/dc converter if the INT fault indicator is lighted. Then, test all digital circuit cards using the MTS as described in chapter 3. Refer to section II for card removal and replacement procedures. When conducting the MTS tests, connect jumper cable W265 between J1 and J3 and disconnect the signal cable from J6 or erroneous failure symptoms will occur. If any digital circuit card checks bad, replace it and repeat the FD test (refer to the operator's manual). If all digital cards check good, then replace each analog card one at a time, and repeat the FD test each time. If the fault still is not corrected, refer the unit to direct support maintenance.

Section II. REPAIR

6-5. Introduction. This section consists of removal and replacement procedures for those items of the DDT that organizational maintenance personnel are authorized to replace. Authorized items are those with an 0 as the third character of the SMR code as shown in the RPSTL of appendix D, volume 4. Removal and replacement procedures for authorized items of the DDT that are common to other major assemblies of the TACFIRE system are contained in chapter 3. Refer to chapter 3 for removal and replacement procedures for:

a. Removal and replacement of case assembly.

b. Removal and replacement of dc/dc converters.

c. Removal and replacement of indicator lenses and boots.

d. Removal and replacement of lamps.

e. Removal and replacement of knobs.

WARNING

To eliminate shock hazard when servicing the DDT, turn off power by setting the POWER switch on the DDT dc/dc converter to OFF. Also set AC OR DC PRIME PWR 28 VDC (J7) switch on the PCG front panel to its off (down) position.

6-6. Extending and Retracting DDTs. The DDTs may be accessed for maintenance according to the following procedures.

NOTE

In the dual DDT configuration, one DDT is mounted above the slide assembly of the case assembly. The other DDT is mounted below the slide assembly. In the single DDT configuration, one DDT is mounted above the slide assembly and a blank plate is installed in the lower position.

a. *Extending DDTs.* Extend the DDTs as follows:

(1) Release six captive screws securing each DDT to case assembly. Pull DDTs together on slide from case assembly until slide locks engage.

(2) Support front of bottom DDT and release two turn-lock fasteners that secure front of bottom DDT to slide assembly. Lower front end of bottom DDT until it is supported by front hanger straps.

(3) Support rear of lower DDT and disengage two spring-plungers that secure rear of bottom DDT to slide assembly. Lower rear end of bottom DDT until it is supported by rear hanger straps.

b. *Retracting DDTs.* To retract the DDTs into the case assembly, perform the procedure in a. above in reverse sequence. Ensure that the FAULT ISOLATION switch on the fault isolation assembly (fig. D-20, 1) is set to OPR before retracting DDT into case.

6-7. Removal and Replacement of Red Area Circuit Cards. These circuit cards are removed and replaced according to the following procedures.

a. *Removal.* Remove red area circuit cards from the right card rack as follows:

CAUTION

Observe special handling procedures in chapter 3 for circuit cards that employ MOS devices. If these types of cards are handled improperly, damage to the MOS devices may result from static charges. The red area circuit cards in the DDT that require special handling are located in A2144 and A2146 (see fig. D-20).

(1) With DDT extended, release three captive screws securing red area cover to DDT. Remove cover and gasket.

(2) Using card extractor, remove any red area (A2102 thru A2146) circuit card from DDT.

b. *Replacement.* To replace a red area circuit card, perform the procedure in a. above in reverse sequence.

6-8. Removal and Replacement of Black Area Circuit Cards. These circuit cards are removed and replaced according to the following procedures.

a. *Removal.* Remove black area circuit cards from the left card rack as follows:

(1) With DDT extended, loosen 22 screws on top and bottom card retainers.

(2) Slide card retainers to rear of DDT.

(3) Using card extractor, remove any black area (A1102 thru A1148) circuit card from DDT.

b. *Replacement.* To replace a black area circuit card, perform the procedure in a. above in reverse sequence.

6-9. Removal and Replacement of Top-Mounted Circuit Cards. These circuit cards are removed and replaced according to the following procedures:

a. *Removal.* Remove the top-mounted DDT circuit cards as follows:

CAUTION

Observe special handling procedures in chapter 3 for circuit cards that employ MOS devices. If these types of cards are handled improperly, damage to the MOS devices may result from static charges. The top-mounted circuit cards in the DDT require special handling and are located in A3101 and A3102 (see fig. D-20).

(1) With DDT extended, remove two screws and retainer.

(2) Using card extractor, remove either circuit card (27 or 28).

b. *Replacement.* To replace a top-mounted DDT circuit card, perform the procedure in a. above in reverse sequence.

6-10. DDT Removal and Replacement. Remove and replace a DDT according to the following procedures.

a. *Removal.* Remove the DDT as follows:

NOTE

Two DDTs may be mounted in a single case assembly. The following procedure can be used to remove either unit. Unless otherwise specified, the steps below apply only to the DDT to be removed.

(1) On front panel of each DDT in common case assembly, set POWER switch to OFF position and verify that power indicator goes off. Set AC OR DC PRIME PWR 28 VDC (J7) switch on PCG front panel to its off (down) position.

(2) Disconnect all external cable assemblies from DDT.

(3) Release six captive screws around DDT perimeter.

(4) Remove six hex-head nuts from studs securing DDT assembly to case slide assembly.

(5) Slide DDT out of case.

b. *Replacement.* To replace the DDT, perform the procedure in a. above in reverse sequence.

c. *Repair Verification.* To verify operation of the replacement DDT, perform the DDT FD test (refer to the operator's manual).

CHAPTER 7

REMOTE DATA TERMINAL ORGANIZATIONAL MAINTENANCE

Section I. TROUBLESHOOTING

7-1. Introduction. Organizational maintenance personnel are authorized to repair the RDT by replacing the items coded as replaceable at the organizational level (refer to RPSTL, appendix D, volume 4). Maintenance consists of isolating a fault to a replaceable component, subassembly, or circuit card; removing and replacing the faulty item; and verifying the repair of the major assembly. In addition, certain procedures for maintaining other major assemblies of the TACFIRE system are also applicable to the RDT. These procedures, which are general in nature, are contained in chapter 3 and are referenced where applicable.

7-2. Troubleshooting Techniques. Fault isolation procedures are performed following detection of an RDT malfunction. In some cases, the cause of trouble can be determined by a visual inspection. In other cases, RDT troubleshooting procedures must be performed. Since there is no M&D FI program for the RDT (RDT is used only in the VFMED and BDU), troubleshooting must be performed with the RDT in either a VFMED or BDU environment.

7-3. Preliminary Troubleshooting Requirements. To troubleshoot the RDT, the VFMED or BDU containing the RDT must have communication with its FDC, and an MTS must be available to test the RDT circuit cards. Therefore, the following steps must be performed before troubleshooting the RDT can be started:

a. Position VFMED or BDU containing RDT near FDC shelter door to permit use of MTS through shelter door.

b. Establish communications between VFMED or BDU containing RDT by making necessary wire connections between FDC shelter CTB and VFMED or BDU junction box.

c. Extend RDT from MEG (in VFMED) or CU (in BDU) following procedures provided in chapter 3.

7-4. Visual Inspection. Inspect the RDT visually for obvious faults and indications of faults. Check for loose or incorrect connections, incorrect switch settings, and improperly seated circuit cards.

7-5. Troubleshooting Procedures. Since the RDT does not have an M&D FI capability, troubleshooting the RDT is an integral part of troubleshooting the VFMED or BDU. Refer to chapter 22 for RDT troubleshooting procedures.

Section II. REPAIR

7-6. Introduction. This section consists of removal and replacement procedures for those items of the RDT that organizational maintenance personnel are authorized to replace. Authorized items are those with an 0 as the third character of the SMR code as shown in the RPSTL of appendix D, volume 4. Removal and replacement procedures for authorized items of the RDT that are common to other major assemblies of the TACFIRE system are contained in chapter 3. Refer to chapter 3 for removal and replacement procedures for:

a. Extending and retracting major assembly from care assembly.

b. Removal and replacement of major assembly.

c. Removal and replacement of case assembly.

CAUTION

Observe special handling procedures in chapter 3 for circuit cards that employ MOS devices. If these types of cards are handled improperly, damage to the MOS devices may result from static charges. The RDT circuit cards that require special handling are (see fig. D-46): A1120, A1121, A1123, A1128, A1131, A1132, and A1133.

d. Removal and replacement of circuit cards.

e. Removal and replacement of indicator lenses and boots.

f. Removal and replacement of lamps.

g. Removal and replacement of knobs.

7-7. Removal and Replacement of DC/DC Converter. The dc/dc converter is removed and replaced according to the following procedure.

WARNING

To eliminate shock hazard when servicing the RDT, remove power by setting RDT POWER switch to OFF and power junction box MAIN POWER circuit breaker to OFF.

a. *Removal.* Remove the dc/dc converter as follows:

(1) Remove prime power cable from connector J1 of dc/dc converter (fig. D-46, 78).

(2) From bottom of RDT, disconnect dc/dc converter connector P1 from connector J1.

(3) Loosen two captive screws securing shield and remove shield.

(4) Hold dc/dc converter (78) in place and remove five screws (80) and washers (79) securing dc/dc converter.

(5) Remove dc/dc converter.

b. *Replacement.* To replace the dc/dc converter, perform the procedure in a. above in reverse sequence.

7-8. Repair Verification. To verify that the repair actions taken have corrected the fault, perform the troubleshooting procedures provided in chapter 22. A fault-free indication for the troubleshooting procedures indicates that the fault has been corrected and that the RDT may be returned to operator control.

CHAPTER 8

COMMUNICATION CONTROL UNIT ORGANIZATIONAL MAINTENANCE

Section I. TROUBLESHOOTING

8-1. Introduction. Organizational maintenance personnel are authorized to repair the CCU by replacing the items coded as replaceable at the organizational level (refer to RPSTL, appendix D, volume 4). Maintenance consists of isolating a fault to a replaceable component, subassembly, or circuit card; removing and replacing the faulty item; and verifying the repair of the major assembly. In addition, certain procedures for maintaining other major assemblies of the TACFIRE system are also applicable to the CCU. These procedures, which are general in nature, are contained in chapter 3 and are referenced where applicable.

8-2. Troubleshooting Techniques. Fault isolation procedures are performed following detection of a CCU malfunction. When the cause of trouble cannot be determined by visual inspection, CCU troubleshooting procedures must be performed. When a malfunction is suspected and no obvious or direct indications of a malfunction exist, reliability of the CCU operation can be assured by performing the CCU self test described in the operator's manual.

8-3. Visual Inspection. Inspect the CCU visually for obvious faults and indications of faults. Check for loose or incorrect cable connections, incorrect switch settings, and improperly installed circuit cards.

8-4. Service Access. To perform troubleshooting and repair, extend the CCU from its case as described in chapter 3.

8-5. Troubleshooting Procedures. Before troubleshooting the CCU, discuss the failure symptoms with the CCU operator to determine the nature or scope of the fault. Based on the most precise information obtainable, perform the most appropriate of the following procedures:

a. If power fault is indicated, observe POWER FAULT indicators on front panel of CCU. If either or both indicators are lighted, replace power supply.

b. If symptom is related to front panel lamps, press LAMP key on keyboard. All front panel indicators should light and LED display should be as shown in figure 8-1. If not, refer to table 8-1 for corrective action.

c. For all other symptoms, perform CCU self-test. If self-test fails, refer to table 8-1 for corrective action.

d. When more than one circuit card is listed for replacement, replace first listed circuit card with a known good circuit card and then rerun CCU self-test. If fault symptom is cleared, return CCU to operator control.

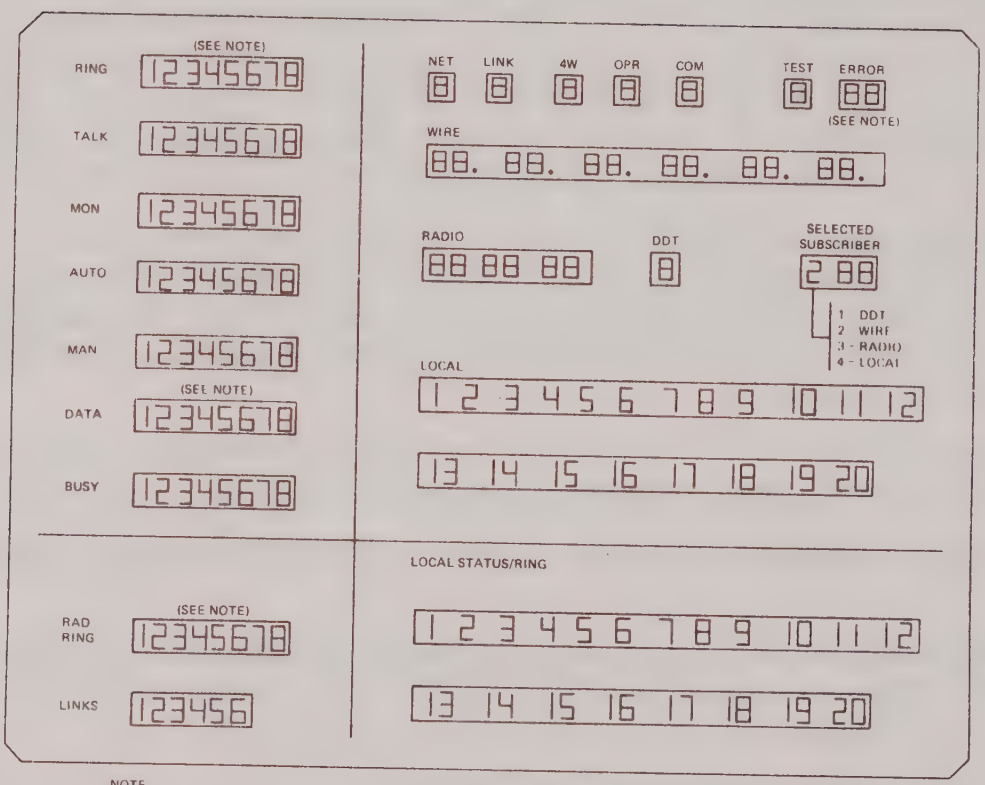

NOTE
DIGITS BLINK AT A 3 HZ RATE

ELOAC032

Figure 8-1. Display Panel Readout During Lamp Test

e. If fault symptom persists, reinstall circuit card just replaced, return known good card to stock, and replace second listed circuit card with a known good circuit card and rerun CCU self-test.

f. Repeat above procedure until all listed circuit cards have been replaced or until fault symptom is cleared. After replacing any faulty circuit card, assembly, or component, perform CCU self-test to confirm operability.

g. Disconnect interconnecting cables at J1145 and J14 to disconnect left-hand bay from right-hand bay. Right-hand bay can operate independently of left-hand bay.

h. Determine if right-hand bay operates satisfactorily. If so, fault is in left-hand bay. If not, fault is located in right-hand bay. Reconnect interconnecting cables.

i. Sequentially unseat subscriber, net control, and operator cards in faulty bay. Check for proper equipment operation after each card is unseated. If operation is satisfactory, replace card.

j. If none of foregoing actions isolate fault, contact direct support maintenance personnel.

Table 8-1. CCU Operating Malfunctions

Symptom	Cause	Corrective action
Improper LED display on front panel	Faulty timing card	Perform CCU self test. If error code 69 is displayed, replace circuit card A2245.
	Faulty display or logic card in LED assembly	Replace LED assembly.
	Faulty circuit card	Replace A2239, A2242, and A2244.
Improper keyboard operation	Faulty keyboard or processor	Replace keyboard assembly and circuit cards A2239, A2241, A2242, A2244, and A2245.
Error code flashes in ERROR window		Replace circuit cards noted.
00-07, 10-17	Faulty ROM input/output or CPU card	Replace circuit cards A2237, A2241, and A2244.
20-27, 30-37	Faulty ROM 1 input/output or CPU card	Replace circuit cards A2237, A2239, and A2241.
40-43	Faulty ROM 2 or CPU Card	Replace circuit cards A2241 and A2244.
44-47	Faulty ROM 1, ROM 2 or CPU card	Replace circuit cards A2239, A2241, and A2244.
51-58, 61-68	Faulty RAM, ROM 1, ROM 2, or CPU card	Replace circuit cards A2239, A2241, A2242, and A2244.
69	Faulty CPU or oscillator card	Replace circuit cards A2241 and A2245.
71	Power supply failure	Replace power supply.
72-74	Incorrect RCMU connection	Reconnect RCMU and correct installation.
78	Faulty ring oscillator	Replace power supply.
79	Ring test failed	Replace circuit card associated with circuit (refer to table 8-2).
	Faulty peripheral equipment	Replace faulty peripheral equipment.
	Faulty RAM card	Replace circuit card A2242.
90-96	Operator error	Refer to operator's manual.
96 (persistent)	Faulty RCMU or RCMU interface card	Repair faulty RCMU (refer to chapter 9). Replace circuit cards A1232, A1234, A1236, A1238, and A1239.
96 (with flickering displays)	Faulty 2-wire, radio, or central logic card	Replace circuit card associated with 2-wire or radio circuit (refer to table 8-2). Replace circuit cards A2235, A2236, and A2237.
97-98	Operator error	Refer to operator's manual.
99	Faulty ROM 1 card	Replace circuit card A2239.
	Keyboard or keyboard processor failure	Replace keyboard assembly.
Unable to establish net	All nets, faulty timing card	Replace circuit card A2245.
	One net, faulty control card	Replace circuit card associated with circuit (refer to table 8-2).

A621-1

Table 8-1. CCU Operation Malfunctions

Symptom	Cause	Corrective action
Unable to transmit, receive, or ring subscriber	Faulty 2-wire card, audio card, RCMU interface card	Replace circuit card associated with circuit (refer to table 8-2).
Battery does not maintain display when power is lost	Faulty battery charger card	Replace circuit card A2107.
	Faulty battery	Replace battery.
Erroneous ringing	Faulty RAM card	Replace circuit card A2242.
Unable to communicate on one or more nets	Faulty circuit card	Replace cards in following order: a. Timing card A2245. b. Net control card(s) for faulty net(s). c. Operator A and B cards A2232 and A2234. d. All subscriber cards in faulty net(s).

A621-2

Table 8-2. Circuit Card to Circuit Correlation

Circuit Card	Card Type	Circuit A	Circuit B
A1102	2 Wire	Wire 17	Local 9
A1104	2 Wire	Wire 18	Local 10
A1106	2 Wire	Wire 19	Local 11
A1108	2 Wire	Wire 20	Local 12
A1110	Net Control	Net 5	Link 5
A1112	Radio	Wire 25	–
A1114	Capacitor	–	–
A1116	Radio	Wire 26	–
A1118	Radio	Wire 27	–
A1120	Radio	Wire 28	–
A1122	Radio	Wire 29	–
A1124	Radio	Wire 30	–
A1126	Radio	Wire 31	–
A1128	Radio	Wire 32	–
A1130	Radio	Local 13	–
A1132	Radio	Local 14	–
A1134	Net Control	Net 6	Link 6
A1136	Radio	Local 15	–
A1138	Radio	Local 16	–
A1140	Radio	Local 17	–
A1142	Radio	Local 18	–
A1204	Radio	Local 19	–
A1206	Radio	Local 20	–
A1208	Radio	Radio 1	–
A1210	Radio	Radio 2	–
A1212	Radio	Radio 3	–
A1214	Net Control	Net 7	Operator
A1216	Radio	Radio 4	–
A1218	Radio	Radio 5	–
A1220	Radio	Radio 6	–
A1222	Radio	Radio 7	–
A1224	Radio	Radio 8	–
A1226	Radio	Radio 9	–
A1228	Radio	Radio 10	–
A1230	Net Control	Net 8	Intercom

622-1

Table 8-2. Circuit Card to Circuit Correlation – Continued

Circuit Card	Card Type	Circuit A	Circuit B
A1232	RCMU Interface	RCMU 1	–
A1234	RCMU Interface	RCMU 2	–
A1236	RCMU Interface	RCMU 3	–
A1238	RCMU Interface	RCMU 4	–
A1239	RCMU Control	RCMU 1–4	–
A2107	Battery Charger	–	–
A2111	Net Control	Net 1	Link 1
A2113	2 Wire	Wire 1	DDT 1
A2115	Capacitor	–	–
A2117	2 Wire	Wire 2	DDT 2
A2119	2 Wire	Wire 3	DDT 3
A2121	2 Wire	Wire 4	DDT 4
A2123	Net Control	Net 2	Link 2
A2125	2 Wire	Wire 5	DDT 5
A2127	2 Wire	Wire 6	DDT 6
A2129	2 Wire	Wire 7	DDT 7
A2131	Capacitor	–	–
A2133	2 Wire	Wire 8	DDT 8
A2135	2 Wire	Wire 9	Local 1
A2137	2 Wire	Wire 10	Local 2
A2139	Net Control	Net 3	Link 3
A2141	2 Wire	Wire 11	Local 3
A2143	2 Wire	Wire 12	Local 4
A2145	2 Wire	Wire 13	Local 5
A2147	2 Wire	Wire 14	Local 6
A2149	2 Wire	Wire 15	Local 7
A2209	4 Wire	DDT 1	DDT 5
A2211	4 Wire	DDT 2	DDT 6
A2213	4 Wire	DDT 3	DDT 7
A2215	4 Wire	DDT 4	DDT 8
A2217	2 Wire	Wire 16	Local 8
A2219	Net Control	Net 4	Link 4
A2221	2 Wire	Wire 21	–
A2223	Capacitor	–	–

622-2

Table 8-2. Circuit Card to Circuit Correlation – Continued

Circuit Card	Card Type	Circuit	
		A	B
A2225	2 Wire	Wire 22	–
A2227	2 Wire	Wire 23	–
A2229	2 Wire	Wire 24	–
A2232	Operator B	–	–
A2234	Operator A	–	–
A2235	Ring, Update, and Keying	Central Logic Unit	–
A2236	Ring Shift Register	Central Logic Unit	–
A2237	Input/Output	Central Logic Unit	–
A2239	ROM 1	Central Logic Unit	–
A2241	CPU	Central Logic Unit	–
A2242	RAM	Central Logic Unit	–
A2244	ROM 2	Central Logic Unit	–
A2245	Oscillator Timing	Central Logic Unit	–

622-3

Section II. REPAIR

8-6. Introduction. This section consists of removal and replacement procedures for those items of the CCU that organizational maintenance personnel are authorized to replace. Authorized items are those with an 0 as the third character of the SMR code as shown in RPSTL of appendix D, volume 4. Removal and replacement procedures for authorized items of the CCU that are common to other major assemblies of the TACFIRE system are contained in chapter 3. Refer to chapter 3 for removal and replacement procedures for:

a. Extending and retracting major assembly from case assembly.

b. Removal and replacement of major assembly.

c. Removal and replacement of case assembly.

CAUTION

Observe special handling procedures in chapter 3 for circuit cards that employ MOS devices. If these types of cards are handled improperly, damage to the MOS devices may result from static charges. All CCU circuit cards (see fig. D-21) require special handling except for the following:

A1114	A2215
A1239	A2223
A2107	A2235
A2115	A2236
A2131	A2237
A2209	A2239
A2211	A2244
A2213	A2245

d. Removal and replacement of circuit cards.

e. Removal and replacement of indicator lenses and boots.

f. Removal and replacement of lamps.

g. Removal and replacement of knobs.

8-7. Removal and Replacement of Power Supply Assembly. The power supply is removed and replaced according to the following procedure.

WARNING

To eliminate shock hazard when servicing the CCU, remove POWER by setting the POWER switch to OFF and by setting circuit breaker J16 (EMER) on the PCG to down position.

a. *Removal.* Remove the power supply from the shelter as follows:

(1) Set PCG circuit breaker EMER (J16) to down position (off).

(2) Remove power cables connected to J1 and J2.

(3) Remove four screws securing power supply to shelter supports.

(4) Remove power supply from shelter guide pins.

b. *Replacement.* To replace the power supply, perform the procedure in a. above in reverse sequence.

8-8. Removal and Replacement of Keyboard Assembly. The keyboard assembly is removed and replaced according to the following procedure.

a. *Removal.* Remove the keyboard assembly from the CCU as follows (fig. D-21):

(1) Set CCU POWER switch to OFF.

(2) Loosen eight captive screws securing keyboard (10) to front panel.

(3) Lift keyboard assembly from front panel to expose connector on back side of keyboard panel.

(4) Disconnect cable between keyboard assembly and CCU front panel.

(5) Remove keyboard assembly from CCU front panel.

b. *Replacement.* To replace the keyboard assembly, perform the procedure in a. above in reverse sequence.

8-9. Removal and Replacement of Light Emitting Diode Assembly. The LED assembly is removed and replaced according to the following procedure.

a. *Removal.* Remove the LED assembly as follows (fig. D-21):

(1) Set CCU POWER switch to OFF.

(2) Loosen 10 captive screws securing LED assembly (7) to CCU front panel.

(3) Carefully lift LED assembly from CCU front panel and disconnect cable between LED assembly and CCU front panel.

(4) Remove LED assembly from front panel.

b. *Replacement.* To replace the LED assembly, perform the procedure in a. above in reverse sequence.

8-10. Removal and Replacement of Battery. The battery is removed and replaced according to the following procedure.

a. *Removal.* Remove the battery from the CCU as follows (fig. D-21):

(1) Set CCU POWER switch to OFF.

(2) Extend assembly out of case (refer to chapter 3).

(3) Remove four screws (12) securing battery (11) to CCU assembly.

(4) Remove battery from CCU assembly and disconnect cable between battery connector J1 and CCU assembly.

(5) Remove battery from CCU assembly.

b. *Replacement.* To replace the battery, perform the procedure in a. above in reverse sequence.

8-11. Removal and Replacement of Footswitch Assembly. The footswitch is removed and replaced according to the following procedure.

a. *Removal.* Remove the footswitch from the shelter support as follows (fig. D-21):

(1) Set CCU POWER switch to OFF.

(2) Disconnect footswitch cable from CCU connector J17 and remove footswitch (4) from shelter support.

b. *Replacement.* To replace the footswitch, perform the procedure in a. above in reverse sequence.

8-12. Removal and Replacement of Captive Screw Assembly. The captive screw assembly is removed and replaced according to the following procedure.

a. *Removal.* Remove the captive screw assembly as follows (fig. D-21):

(1) Turn CCU POWER switch to OFF.

(2) Extend CCU assembly out to case (refer to chapter 3).

(3) Unscrew captive screw assembly (1) while holding retainer nut (2) with screwdriver.

(4) Remove captive screw assembly (1) and retainer nut (2) from CCU.

b. *Replacement.* To replace the captive screw assembly, perform the procedure in a. above in reverse sequence.

8-13. Removal and Replacement of Indicator Lens. The indicator lens is removed and replaced according to the following procedure.

a. *Removal.* Remove indicator lens as follows (fig. D-21):

(1) Unscrew indicator lens (14) counterclockwise until fully unfastened.

(2) Remove indicator lens (14).

(3) Remove lamp (15) from indicator lens.

b. *Replacement.* Replace indicator lens as follows:

(1) Paint top half of indicator lens (14) with black ink (MIL-I-43553).

(2) To replace indicator lens, perform the procedure in a. above in reverse sequence.

8-14. Repair Verification. To verify repair of the CCU, perform the CCU self-test described in the operator's manual. If self-tests are successfully completed, return CCU to operator control.

CHAPTER 9

REMOTE COMMUNCATIONS MONITOR UNIT ORGANIZATIONAL MAINTENANCE

Section I. TROUBLESHOOTING

9-1. Introduction. Organizational maintenance personnel are authorized to repair the RCMU by replacing the items coded as replaceable at the organizational level (refer to RPSTL, appendix D, volume 4). Maintenance consists of isolating a fault to a replaceable component, subassembly, or circuit card; removing and replacing the faulty item; and verifying the repair of the major assembly. In addition, certain procedures for maintaining other major assemblies of the TACFIRE system are also applicable to the RCMU. These procedures, which are general in nature, are contained in chapter 3 and are referenced where applicable.

9-2. Troubleshooting Techniques. Fault isolation procedures are performed following detection of an RCMU malfunction. If the cause of trouble cannot be determined by visual inspection, the RCMU troubleshooting procedures must be performed. When a malfunction is suspected and no obvious or direct indication of a malfunction exists, reliability of the RCMU operation can be assured by performing the RCMU operational checkout (refer to operator's manual).

9-3. Visual Inspection. Inspect the RCMU visually for obvious faults and indications of faults. Check for loose or incorrect cable connections, incorrect switch settings, and improperly installed circuit cards.

9-4. Troubleshooting Procedures. Before troubleshooting the RCMU, verify the failure symptoms with the operator. If a power fault is indicated, recycle power to the RCMU. If the fault remains, perform the RCMU operational checkout-procedure (refer to operator's manual) to isolate a malfunction to a faulty item. After the malfunction has been isolated, replace the faulty item and repeat the operational checkout to verify that the RCMU is operational.

Section II. REPAIR

9-5. Introduction. This section consists of removal and replacement procedures for those items of the RCMU that organizational maintenance personnel are authorized to replace. Authorized items are those with an O as the third character of the SMR code as shown in the RPSTL of appendix D, volume 4. Removal and replacement procedures for authorized items of the RCMU that are common to other major assemblies of the TACFIRE system are contained in chapter 3. Refer to chapter 3 for removal and replacement procedures for:

a. Lenses and lamps (fig. D-41, 22 and 9).

b. Knobs (11) and (19).

9-6. Removal and Replacement of Front Panel Assembly and Transit Case. The front panel assembly is removed and replaced according to the following procedure (see fig. D-41).

WARNING

To eliminate shock hazard when servicing the RCMU, remove power by setting PCG circuit breaker (J16) EMER to off (down).

NOTE

When PCG circuit breaker (J16) EMER is turned off, the CCU retains memory data through the use of battery power. Do not leave power off for more than approximately 15 minutes to prevent draining the CCU battery power and to avoid reinitializing the CCU.

a. *Removal.* Remove the front panel assembly (5) from the transit case (1) as follows:

(1) Set POWER switch to OFF.

(2) Remove signal-power cable P2 from J1 on panel assembly.

(3) Set PCG circuit breaker (J16) EMER to on (up).

(4) Loosen 14 captive screws securing front panel assembly (5) to transit case (1).

(5) Grasp front panel assembly handles and carefully lift front panel assembly out of transit case.

b. *Replacement.* To replace the front panel assembly (5) or transit case (1), perform the procedure in a. above in reverse sequence.

9-7. Removal and Replacement of Circuit Card Assembly. The circuit card assembly is removed and replaced according to the following procedure (see fig. D-41).

WARNING

To eliminate shock hazard when servicing the RCMU, remove power by setting PCG circuit breaker (J16) EMER to off (down).

NOTE

When PCG circuit breaker (J16) EMER is turned off, the CCU retains memory data through the use of battery power. If more than 15 minutes elapses before turning the circuit breaker back on, the CCU will have to be reinitialized.

a. *Removal.* Remove circuit card assembly (29) as follows:

(1) Remove front panel assembly (5) from transit case (1) following procedures of paragraph 9-6a.

(2) Remove six screws (30) and six washers (31) securing circuit card assembly (29) to front panel assembly.

(3) Remove connector J3 from circuit card assembly connector P1.

CAUTION

Observe special handling procedures in chapter 3 for circuit cards that employ MOS devices. If these types of cards are handled improperly, damage to the MOS devices may result from static charges.

(4) Remove circuit card assembly (29) from front panel assembly (5).

b. *Replacement.* To replace the circuit card assembly, perform the procedure in a. above in reverse sequence.

9-8. Repair Verification. Verify RCMU repair by performing the operational checkout-instructions described in the operator's manual. If operation checkout is successful, return RCMU to operator control.

CHAPTER 10

SWITCH PANEL ASSEMBLY ORGANIZATIONAL MAINTENANCE

Section I. TROUBLESHOOTING

10-1. Introduction. Organizational maintenance personnel are authorized to repair the SPA by replacing items coded as replaceable at the organizational level (refer to RPSTL, appendix D, volume 4). Maintenance consists of isolating a fault to a replaceable component, subassembly, or circuit card; removing and replacing the faulty item; and verifying the repair of the major assembly. In addition, certain procedures for maintaining other major assemblies of the TACFIRE system are also applicable to the SPA. These procedures, which are general in nature, are contained in chapter 3 and are referenced where applicable.

10-2. Troubleshooting Techniques. FI procedures are performed following detection of a SPA malfunction (refer to chapter 3). In some cases, the cause of trouble may be determined by visual inspection. In all other cases, the M&D ACC FI test must be run.

10-3. Visual Inspection. Before initiating the M&D ACC FI test, inspect the SPA visually for obvious faults and indications of faults. Check for loose or incorrect cable connections, incorrect switch settings, and improperly seated circuit cards. Power faults are indicated by fault indicators on the SPA front panel and on the dc/dc converter. If a power fault is suspected (FAULT indicator lighted, POWER ACC indicator off, or dc/dc converter external fault indicator lighted), recycle power. If the fault indication is cleared, resume normal operation. If a power fault is still indicated, proceed with troubleshooting procedures. Table 10-1 lists corrective actions for various fault indications. See figure 10-1 for component location, including circuit card A1139. Circuit card A1139 provides fault indicators for FI to replaceable subassemblies. Perform a lamp test on circuit card A1139 as follows:

a. Press and hold down fault disable switch S1 on circuit card A1139.

b. While holding down switch S1, press lamp test switch S3 on A1139. Check that fault indicators 1, 4, 6, and 7 are lighted. If indicators 1, 4, 6, and 7 fail to light, replace circuit card A1139.

c. If A1139 passes lamp test, press lamp test reset switch S2 while still holding down fault disable switch S1.

d. Release fault disable switch S1.

10-4. FI Using M&D Program. If visual inspection does not locate the fault in the SPA, run the M&D ACC FI test as follows:

a. From IOU, request ACC FI test provided by M&D program (refer to operator's manual).

b. Observe and interpret DIAGNOSE STATUS indicators on CPU front panel or use FI message on ELP printout to obtain M&D error stop number.

Table 10-1. SPA Visual Troubleshooting

Fault indication	Probable cause	Corrective action
Fault indicator on SPA front panel lighted.	Faulty dc/dc converter or oscillator circuit card.	Perform lamp test on circuit card A1139. Then check indicators and diagnose as described below.
Indicator 1 on circuit card A1139 lighted.	−5v undervoltage condition.	Replace circuit card A1142.
Indicator 4 on circuit card A1139 lighted.	+5 undervoltage condition.	Replace dc/dc converter.
Indicator 6 on circuit card A1139 lighted.	+12 undervoltage condition.	Replace circuit card A1142.
Indicator 7 on circuit card A1139 lighted.	Faulty oscillator circuit card.	Replace circuit card A1115.
Fault indicator on series regulator circuit card A1141 or A1142 lighted.	Faulty series regulator circuit card	Replace circuit card that has lighted indicator.

607

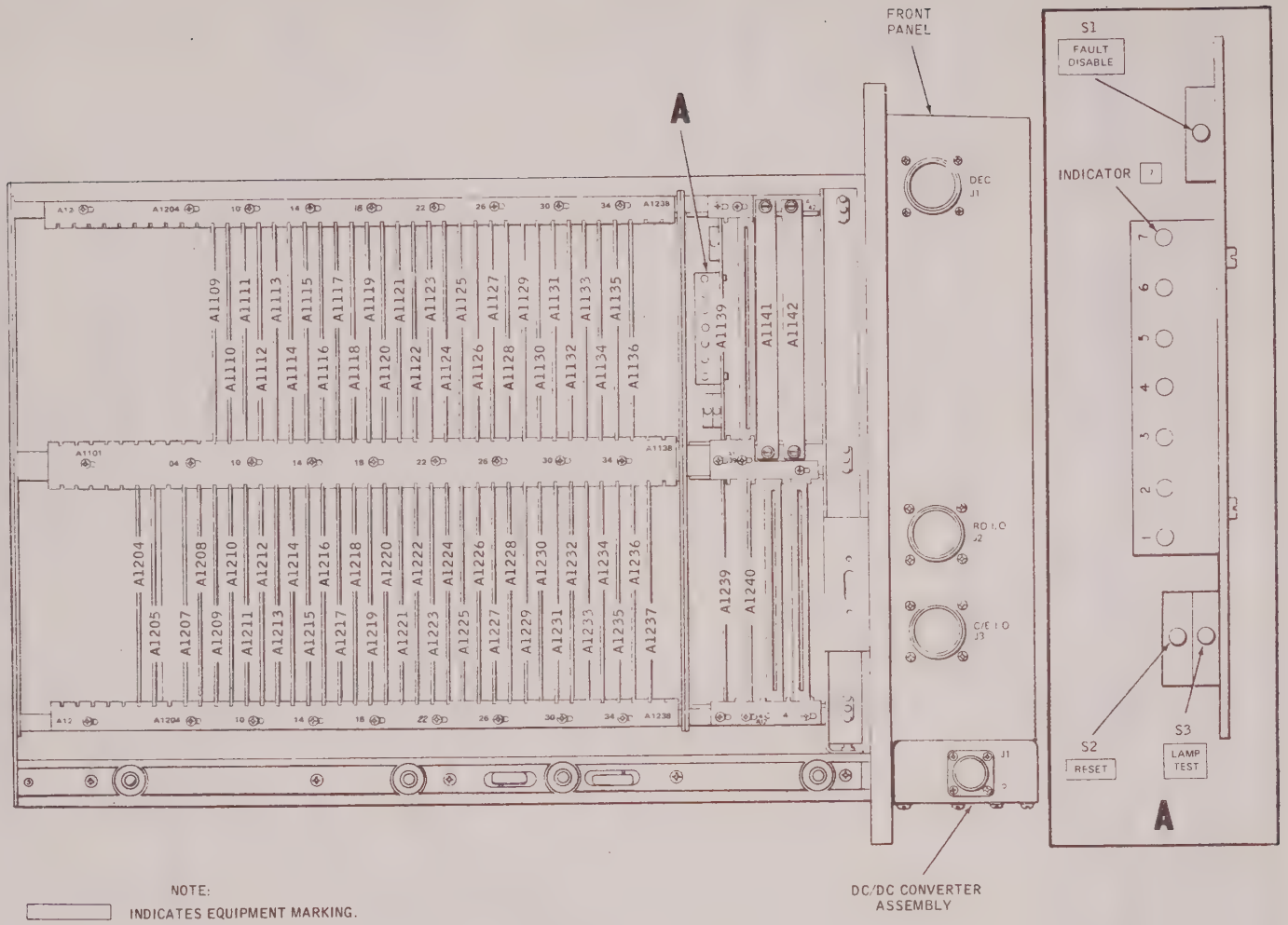

Figure 10-1. SPA Visual Troubleshooting

c. Use SPA section of M&D fault catalog (refer to operator's manual) to find error stop number and associated list of suspect circuit cards.

d. Extend SPA out of case assembly (refer to chapter 3).

e. Isolate and replace faulty digital circuit card using MTS, or isolate and replace faulty analog circuit card (chapter 3).

f. Repeat steps a thru e until ELP printout or CPU front-panel indicators show no fault in SPA.

Section II. REPAIR

10-5. Introduction. This section consists of removal and replacement procedures for those items of the SPA that organizational maintenance personnel are authorized to replace. Authorized items are those with an 0 as the third character of the SMR code as shown in the RPSTL of appendix D, volume 4. Removal and replacement procedures for authorized items of the SPA that are common to other major assemblies of the TACFIRE system are contained in chapter 3. Refer to chapter 3 for removal and replacement procedures for:

a. Extending and retracting major assembly from case assembly.

b. Removal and replacement of major assembly.

c. Removal and replacement of case assembly.

d. Removal and replacement of circuit cards.

e. Removal and replacement of indicator lenses and boots.

f. Removal and replacement of lamps.

g. Removal and replacement of knobs.

WARNING

To eliminate shock hazard when servicing the SPA, turn off power. Press the SPA front-panel POWER ACC switch to turn off the indicator. Then, set the AC OR DC PRIME PWR 28 VDC (J5) switch on the PCG front panel to its off (down) position.

10-6. Removal and Replacement of DC/DC Converter. Remove and replace the dc/dc converter from the SPA according to the following procedures.

a. *Removal.* Remove the dc/dc converter (fig. D-37, 15) from the SPA as follows:

(1) Turn off SPA power and extend SPA out of ACC case assembly (refer to chapter 3).

(2) Disconnect external cable connected to dc/dc converter connector J1.

CAUTION

Be careful when removing or installing the dc/dc converter to prevent damage to connector plug P1 and cable.

(3) Inside SPA, disconnect dc/dc converter cable connector P1 from SPA connector J5. Observe original routing of dc/dc converter cable into SPA.

(4) Remove five screws (16) and washers (17) that secure dc/dc converter assembly to SPA front panel. Remove dc/dc converter assembly (15).

b. *Replacement.* To replace the dc/dc converter assembly, proceed as follows:

(1) Perform dc/dc converter removal procedure of paragraph a. above in reverse sequence to install replacement assembly.

(2) Verify operation of replacement dc/dc converter by running M&D ACC FI test (refer to operator's manual).

CHAPTER 11

DISPLAY EDITOR ORGANIZATIONAL MAINTENANCE

Section I. TROUBLESHOOTING

11-1. Introduction. Organizational maintenance personnel are authorized to repair the DE by replacement of circuit cards, the dc/dc converter, front panel knob, and front panel indicator lens, lamp, and boot. The first step in DE maintenance is isolation of the fault to a replaceable circuit card or subassembly. The second step is removal and replacement of the faulty item. The third step is verification of the DE repair. Certain procedures necessary in DE maintenance are general in nature and are identical for other FDC units. Refer to Chapter 3 of this manual for procedures covering extension and retraction of the unit from the case assembly, removal and replacement of the DE case assembly, removal and replacement of the dc/dc converter, and removal and replacement of circuit cards. Troubleshooting data is provided for the raster scan type DE only. For information on the electrostatic type DE, refer to TM 11-7440-252-35.

11-2. Troubleshooting Techniques for the DE in an RD Configuration. The two DEs in the ACC, although physically and functionally identical, provide different functions when installed in the normal configuration of the ACC. The RD, normally the upper DE, is that DE not connected to the keyboard assembly. Power to the RD is provided by the actuation of the POWER RD switch on the SPA. Fault indications are provided by the visual observation of the FAULT indicator on the DE front panel and conditions displayed on the display edit crt screen, or by the results of the ACC FD test. The RD and CED contain digital and analog card assemblies and one module, the dc/dc converter, replaceable at the organizational level of maintenance. (See figure 40 of the RPSTL for component location.) To visually troubleshoot the RD, follow procedure in paragraph a below. Instructions for troubleshooting the RD, using the M&D program FI test, are given in paragraph b below.

WARNING

High voltages exist in the DE. DEATH ON CONTACT may result if personnel fail to observe safety precautions. Be aware of possible residual charges retained in the DE crt when operating power is removed. Use grounded discharge probe on all points before touching them.

a. *Fault Isolation by Visual Indication.* Hardware fault indications and improper operation of the RD can be used to isolate faults in the unit. Table 11-1 provides a list of visual fault indications, the probable cause of the malfunction, and the corrective actions to be taken. If the procedure given does not correct

Table 11-1. DE Troubleshooting Chart

Fault indication	Probable cause	Corrective action
Crt display is not focused.	Front panel assembly FOCUS control out of adjustment	With characters covering all sections of crt screen and BRT control set for normal operation, adjust FOCUS control for sharp, well-defined characters; if FOCUS control cannot be adjusted, hv power supply must be replaced. Contact DS maintenance activity to replace the hv power supply.
No display appears on crt screen	Front panel assembly BRT control not in correct position	Adjust BRT control.
	HV power supply	To check hv power supply, place switch S3 in TEST position. If raster appears on crt, hv power supply is in working order. If raster does not appear, contact DS Maintenance activity to replace hv power supply.
	Deflection amplifier fault	Contact DS maintenance activity to replace deflection amplifier.
	Power not applied	Set 7000 volt maint switch S1 and power interlock switch S4 to on position
	Defective circuit card	Using MTS, test cards A2101 thru A2128. If no faults are indicated test cards A1101 thru A1107 and A1110 thru A1123. Replace cards as required.
Dots of crt characters are missing	Loss of digital information	Remove and replace cards A1108, A1109 and A3103.
	Faulty deflection amplifier module	Place TEST switch S3 to ON and check test scan on screen. If test scan is faulty, contact DS maintenance activity to replace deflection amplifier.
Crt display characters intensity not consistent	Defective deflection amplifier	Contact DS maintenance activity to remove and replace deflection amplifier.
	Defective circuit card	Using MTS, test cards A2101 thru A2128. If no faults are indicated above, test cards A1101 thru A1107 and A1110 thru A1123. Replace cards as required.
Display distorted and operates erratically	Defective dc/dc converter	Remove and replace dc/dc converter.
	HV power supply	Contact DS maintenance activity to replace hv power supply.
	Deflection amplifier	Contact DS maintenance activity to replace deflection amplifier.
Distorted sweep or loss of sweep on crt screen	Defective circuit card	Using MTS, test cards A1101 thru A1107 and A1110 thru A1123. If no faults are indicated, test cards A2101 thru A2128. Replace cards as required.
	HV power supply	Use test switch S3 to determine if test scan on crt is correct. If not, contact DS maintenance activity to replace the hv power supply.
	Deflection amplifier	Contact DS maintenance activity to replace deflection amplifier.

623-1

Table 11-1. DE Troubleshooting Chart – Continued

Fault indication	Probable cause	Corrective action
Distorted characters or loss of characters on crt	Faulty circuit card	Replace card A3103. If replacing card A3103 fails to cure the problem, MTS test cards A2101 thru A2128. If no failures are indicated, test cards A1101 thru A1107 and A1110 thru A1123. Replace cards as required.
	Deflection amplifier	Contact DS maintenance activity to replace deflection amplifier.
Front panel assembly FAULT indicator does not light and dc/dc converter FAULT indicator is lighted	Defective dc/dc converter	Replace dc/dc converter.
Card A3110 fault indicator no. 1 lights	Defective −5v supply	Replace dc/dc converter.
Card A3110 indicator no. 2 lights	HV power supply	Check hv lead to assure that it has not become disconnected. Reconnect hv lead if necessary. If problem remains, contact DS maintenance activity to replace hv power supply.
Card A3110 fault indicator no. 3 lights	Deflection amplifier fault	Contact DS maintenance activity to replace deflection amplifier.
Card A3110 fault indicator no. 4 lights	Defective +5v supply	Replace dc/dc converter.
Card A3110 fault indicator no. 5 lights	Oscillator circuit card fault	Replace card A2129.
Card A3110 fault indicator no. 6 lights	Defective +12v supply	Replace dc/dc converter. If problem remains, contact DS maintenance activity to replace deflection amplifier.
Card A3110 fault indicator no. 7 lights	Wiring problem (since lamp no. 7 is not used)	Contact DS maintenance activity.
Indicators on card A3110 do not light during lamp test	Defective power control circuit card assembly	With DE power applied, press LAMP TEST switch S3 on control circuit card. Ensure that all seven indicators and the fault lamp on dc/dc converter light. Press LAMP TEST reset switch S2. Ensure that all seven indicators go off. Recycle power to reset power supply. If any power control circuit card indicators did not light during lamp test, replace card A3110.
DE and keyboard appear normal but will not interface correctly with system	Defective circuit card	Using MTS, test cards A2101 thru A2128. If no failures are indicated, test cards A1101 thru A1107 and A1110 thru A1123. If fault remains, replace card A3105.
No display visible on crt after approximately one minute and hv indicator and front panel FAULT indicator lights	HV lead disconnected	Reconnect hv lead.

623–2

the malfunction, continue troubleshooting using the M&D FI procedures. As with the SPA, the fault indicators identify power assembly failures. The power assemblies are monitored by power control card assembly A3110 on the right-hand card cage of the DE (see fig. D-40). The dc/dc converter assembly is equipped with a fault indicator that lights when a power failure exists internal to the dc/dc converter. When the FAULT indicator on the DE front panel is on, troubleshoot the DE as follows:

WARNING

Be extremely careful of high voltages present in the DE, and set the 7000 VOLT MAINT SWITCH to off (rear position) whenever possible.

(1) On SPA front panel, press POWER RD switch to remove power from RD; observe that indicator goes off.

(2) Extend upper DE (if acting as RD, not connected to keyboard assembly) out of ACC case assembly to locked position (refer to chapter 3).

(3) Reset automatic hv interlock switch S4 at rear of DE.

(4) On SPA front panel, press POWER RD switch; observe that indicator lights.

(5) Place TEST switch S3 to ON position and observe a raster scan on crt that covers approximately half the screen. If no display appears on the crt, refer to operator's manual for ACC fault isolation test procedure. If scan appears normal, return switch S3 to OFF position.

(6) Observe status of lamps 1 thru 7 on card A3110. If all lamps are off, perform power control card lamp test as follows:

(a) Press lamp test switch S3 on card A3110. Check that all seven fault lamps are on. If any lamp fails to light, replace card A3110 (refer to chapter 3).

(b) If card A3110 passes lamp test, press lamp test reset switch S2 on card A3110 and observe that all seven fault lamps go off. Observe that fault lamp on dc/dc converter remains on.

(c) Recycle DE power to reset dc/dc converter.

(7) If any lamp on card A3110 is lighted, refer to table 11-1 for corrective action.

(8) When test pattern displayed on RD crt shows obvious errors, locate symptoms and perform corrective action in table 11-1.

b. *Fault Isolation to Digital and Analog Card Assemblies.* When no power failures are detected, troubleshoot a malfunctioning RD as follows:

(1) From IOU, request ACC FI test provided by M&D program (refer to chapter 3). Follow instructions displayed on DEs (refer to operator's manual for ACC fault isolation test procedures). Test patterns utilized in FI test are shown in operator's manual. Test switches are listed in table 11-2. Keyboard test pattern is also shown in operator's manual.

(2) Observe and interpret DIAGNOSE STATUS lights on CPU front panel or obtain FI message from ELP printout.

(3) If observed test error occurred due to an incorrect CED display of a keyboard character entry, perform following:

(a) Cancel ACC FI test (set 00 in IOU TEST thumbwheels and press TEST START).

(b) Perform instructions described in operator's manual to isolate faulty keyboard assembly.

(4) Find error stop number in RD section of M&D fault catalog and a list of suspect cards that might be cause of trouble. Follow instructions therein. Refer to Appendix D (fig. D-40) for card type data and location and proceed as follows:

(a) If a digital card assembly is suspect, perform FI procedure using MTS (refer to chapter 3).

(b) If an analog card assembly is suspect, perform FI procedure (refer to chapter 3).

(5) Repeat steps (1) thru (3) above, as required, until FI message indicates no fault ACC DE.

(6) Retract RD into ACC case assembly (refer to chapter 3).

11-3. Troubleshooting Techniques for the DE in a CED Configuration. The keyboard assembly is mounted directly ahead of the lower portion of the lower DE, normally the CED. In the normal installed position, the keyboard assembly bars the direct access to four of the seven captive screws that secure the lower DE to the ACC case assembly. To provide access to these four captive screws, the keyboard assembly can be lowered on two pins on the sides of the DE front panel. Power to the CED is provided when the keyboard POWER switch is set to ON. Fault indications are provided by visual observation of the FAULT indicator on the CED front panel and conditions displayed on the DE crt screen, or by the results of the ACC FD test. Troubleshoot the CED as follows:

WARNING

Be extremely careful of high voltages present in the DE, and set the hv maintenance switch to OFF (rear position) whenever possible.

Table 11-2. Interrupt Switch Test Switches

1. RD TEST
2. C/E D TEST (C/E TEST)
3. SPARE
4. CANCEL CHECK FIRING (CANCEL CHK FIRE)
5. FPF
6. CHECK FIRING (CHK FIRING)
7. DELETE
8. RD XMIT
9. TRANSFER TO EDIT
10. RD CMPTR ACTION
11. PAGE
12. CYCLE MESSAGES
13. PRIORITY MESSAGE
14. ILL SW ACTION
15. REPLACE
16. SAVE
17. RESTORE
18. COMMAND
19. SELECT

A624

a. Extend lower DE out of ACC case assembly as follows:

(1) Set keyboard POWER switch to OFF.

(2) Release two captive bolts that secure top portion of keyboard to DE; pivot keyboard down on two pins in frame of DE front panel.

(3) Extend lower DE out of ACC case assembly to locked position.

(4) Reset automatic hv interlock switch S4, at rear of DE.

CAUTION

In the following step, ensure that the captive screws are properly aligned prior to tightening, or cross-threading may result.

b. Pivot keyboard up on two pins, and engage two captive bolts on top of keyboard into DE mounting holes. Tighten two captive bolts. Power up CED.

c. Troubleshoot failures utilizing visual fault indication as described in paragraph 11-2.

d. Isolate faults to digital or analog card assemblies as described in paragraph 11-2.

e. Following completion of troubleshooting procedure and repair by replacement of CED, retract CED into ACC case assembly (refer to chapter 3).

11-4. Troubleshooting the DE in the VFMED Configuration. The VFMED configuration does not have the capability of FI testing by the M&D program. DE troubleshooting, in the VFMED, must be accomplished using hardware fault indications, the DE raster test (switch S3) and the VFMED self test. Refer to the VFMED operator's manual, TM 11-7440-253-10 for the self test procedure. Fault indications and required corrective actions are given in table 11-1.

WARNING

HIGH VOLTAGES exist in the DE. DEATH ON CONTACT may result if personnel fail to observe safety precautions. If possible, eliminate shock hazard when servicing the DE by turning off power to the DE. Also, set 7000 VOLT MAINT SWITCH to off position whenever possible.

NOTE

Initial troubleshooting of a VFMED DE should be accomplished within the VFMED configuration. When the VFMED is returned to the FDC for repair, reestablish communication with the FDC before starting troubleshooting procedures.

11-5. Test After Repair. Verify DE repair by running the M&D ACC FI test. When the DE is in the VFMED configuration, verify repair by use of the VFMED self test and by initiating the appropriate FDC-to-VFMED remote loop test.

Section II. REPAIR

11-6. Introduction. Removal and replacement procedures for those items of the DE that organizational maintenance personnel are authorized to replace are those with an 0 as the third character of the SMR code (refer to RPSTL appendix D, volume 4). All removal and replacement procedures for authorized items of the DE are common to other major assemblies of the TACFIRE system and are contained in chapter 3. Refer to chapter 3 for removal and replacement procedures for:

a. Extending and retracting major assembly from case assembly.

b. Removal and replacement of major assembly.

c. Removal and replacement of case assembly.

d. Removal and replacement of circuit cards.

e. Removal and replacement of dc/dc converters.

f. Removal and replacement of indicator lenses and boots.

g. Removal and replacement of lamps.

h. Removal and replacement of knobs.

CHAPTER 12

ALPHANUMERIC EDITOR KEYBOARD ASSEMBLY ORGANIZATIONAL MAINTENANCE

Section I. TROUBLESHOOTING

12-1. Introduction. Organizational maintenance personnel are authorized to repair the keyboard assembly by replacing the items coded as replaceable at the organizational level (refer to RPSTL, appendix D, volume 4). Maintenance consists of isolating a fault to a replaceable component, subassembly, or circuit card; removing and replacing the faulty item; and verifying the repair of the major assembly. In addition, certain procedures for maintaining other major assemblies of the TACFIRE system are also applicable to the keyboard assembly. These procedures, which are general in nature, are contained in chapter 3 and are referenced where applicable.

12-2. Troubleshooting Techniques. FI procedures are performed following detection of a keyboard assembly malfunction (refer to chapter 3). In some cases, the cause of trouble may be determined by visual inspection. In all other cases, the keyboard assembly troubleshooting procedure must be performed.

NOTE

There is no M&D FI program for the keyboard.

12-3. Fault Isolation. In the normal ACC configuration, the lower DE is connected to the keyboard assembly and operates as the CED. Messages generated by manual operation of the keyboard assembly are displayed on the CED screen. When the message displayed by the CED contains errors or faulty character displays, the trouble may be caused by a malfunction within either the CED or keyboard assembly. Isolate the fault as follows:

a. Note errors displayed on CED screen.

b. Press PRINT switch on keyboard assembly. Compare message displayed by CED with that printed on ELP.

NOTE

During normal system operation, any message generated by the keyboard assembly that appears on both the CED screen and ELP printout should be identical.

c. If ELP printout is fault free, incorrect display is due to malfunctioning CED. Refer to chapter 11 for DE troubleshooting procedure.

d. If both ELP printout and DE display are incorrect, perform the following:

(1) Turn off power to ACC by pressing ACC POWER switch on SPA front panel.

(2) Reconfigure ACC so that upper DE operates as CED and lower DE operates as RD.

NOTE

Reconfiguration is accomplished without physically interchanging the two DE units. Exchange the J1 cable connections on both units and connect the keyboard assembly cable to the J3 connector on the upper DE.

(3) Turn on power to ACC by pressing ACC POWER switch on SPA front panel.

NOTE

Allow 60 to 90 seconds for DE warm-up.

(4) Compose original message on keyboard assembly and check results displayed on upper DE screen.

(5) If message displayed on upper DE screen contains same errors or faulty character displays, trouble lies within keyboard assembly. Perform corrective action described in paragraph 12-4.

(6) If message displayed on upper DE screen is fault free, trouble lies within lower DE. Refer to chapter 11 for DE troubleshooting procedure.

(7) Turn off power to ACC by pressing ACC POWER switch on SPA front panel.

(8) Restore ACC to normal operating configuration. Lower DE should be connected to keyboard assembly and operate as CED. Upper DE should operate as RD.

(9) Apply power to ACC by pressing ACC POWER switch on SPA front panel.

12-4. Corrective Action. Since the only organizational level repairs that are authorized consist of removal and replacement of three major items, the keyboard assembly, keyboard subassembly, and wiring harness, perform a visual inspection for any obvious defects. If a visual inspection does not reveal any problems with either the keyboard subassembly or wiring harness, remove and replace the keyboard subassembly. Then, perform the test of paragraph 12-5 and determine if the problem has been corrected. If not, remove and replace the wiring harness. Refer to section II of this chapter for appropriate removal and replacement procedures.

NOTE

The A/N keyboard portion of the ACC M&D FI program provides a check of all keyboard functions, but it is not a specific FI test for the keyboard assembly.

12-5. Repair Verification. Verify keyboard repair by performing the A/N keyboard test portion of the ACC M&D FI program. Refer to the operator's manual for procedure to be used in selecting the ACC M&D FI program. Follow the instructions displayed on the CED and/or RD screens. Keyboard assembly repair can also be verified by operating every key and switch on the keyboard assembly front panel and observing the results on the CED screen. Operation of the PRINT switch should result in ELP printout of data displayed on the CED screen. The TRANSMIT function is used only with keyboard assemblies in the VFMED configuration; however, operation of the TRANSMIT switch should cause the TRANSMIT indicator to light.

Section II. REPAIR

12-6. Introduction. This section consists of removal and replacement procedures for the keyboard assembly, keyboard subassembly, wiring harness, and a limited number of structural items authorized for organizational level maintenance.

12-7. Removal and Replacement of Keyboard Assembly. The keyboard assembly is removed from, and replaced on, the CED according to the following procedures.

CAUTION

To preclude damage to the keyboard assembly, set PCG AC OR DC PRIME PWR 28 VDC (J5) switch to off (down) prior to removal or replacement of keyboard assembly.

a. *Removal.* Remove the keyboard assembly from the CED as follows:

(1) Disconnect wiring harness connector W1P1 from CED connector J3.

(2) Support keyboard assembly and release two captive screws that attach keyboard assembly supports to front of CED front panel.

(3) Lower keyboard assembly (unit pivots down on two captive screws that attach keyboard assembly supports to sides of CED front panel).

(4) Support keyboard assembly and release two captive screws that attach keyboard assembly supports to sides of CED front panel.

b. *Replacement.* To replace the keyboard assembly, perform the procedure in a. above in reverse sequence.

12-8. Removal and Replacement of Keyboard Subassembly. The keyboard subassembly is removed and replaced according to the following procedures.

CAUTION

To preclude damage to the keyboard assembly, set PCG AC OR DC PRIME PWR 28 VDC (J5) switch to off (down) prior to servicing the keyboard assembly.

a. *Removal.* Remove the keyboard subassembly from the keyboard housing as follows (fig. D-39):

(1) Set AC OR DC PRIME PWR 28 VDC (J5) switch to off (down) on PCG.

(2) Release 14 captive screws around perimeter of keyboard subassembly (35).

CAUTION

To preclude damage to connectors W1P2 and A2J2, loosen connector screws alternately so as to separate pins in a straight line.

(3) Tilt keyboard subassembly upward. Release two screws holding wiring harness connector W1P2 in place, and disconnect W1P2 from circuit card connector A2J2.

(4) Remove entire keyboard subassembly from housing (31).

b. *Replacement.* To replace a keyboard subassembly, perform the procedure in a. above in reverse sequence.

12-9. Removal and Replacement of Wiring Harness or RFI Seal. The wiring harness or seal is removed and replaced according to the following procedures.

CAUTION

To preclude damage to the keyboard assembly, set PCG AC OR PRIME PWR 28 VDC (J5) switch to off (down) prior to servicing the keyboard assembly.

a. *Removal.* Remove the wiring harness or seal from the keyboard assembly as follows (fig. D-39):

(1) Perform procedures in paragraph 12-8a to remove keyboard subassembly.

(2) Disconnect wiring harness (28) connector W1P1 from CED connector J3.

(3) Cut two cable straps that support harness inside housing (31).

(4) Remove four nuts (21), four screws (30), and 12 washers (22, 23, and 29, three per screw) holding cable bushing to housing (31).

(5) Remove wiring harness by pulling through cable opening in side of housing, carefully pulling connector W1P2 through seal (24, an RFI seal).

b. *Replacement.* To replace a wiring harness, perform the procedure in a. above in reverse sequence. Also, ensure that holes in seal are aligned properly with screw holes in housing before attaching hardware and that cable bushing is oriented to place cable closet to support (25).

12-10. Removal and Replacement of Housing. The housing is removed and replaced according to the following procedures.

a. *Removal.* Remove the housing as follows (fig. D-39):

(1) Perform procedures of paragraph 12-8a to remove keyboard subassembly.

(2) Perform procedures of paragraph 12-9a to remove wiring harness.

(3) Remove housing (31), with attaching supports (25 and 32), from CED by releasing four captive screws (two for each support), ensuring that housing is supported as it is detached from CED.

(4) Remove supports (25 and 32) from housing by removing six screws and washers (27 and 26, three per support).

b. *Replacement.* To replace a housing, perform t procedures in a. above in reverse sequence.

12-11. Removal and Replacement of Supports. The supports (fig. D-39, 25 and 32) are removed by following the procedures of paragraph 12-10a, steps (3) and (4); replacement is in the reverse order.

CHAPTER 13

ELECTRONIC LINE PRINTER ORGANIZATIONAL MAINTENANCE

Section I. TROUBLESHOOTING

13-1. Introduction. Organizational maintenance personnel are authorized to repair the ELP by replacing the items coded as replaceable at the organizational level (refer to RPSTL, appendix D, volume 4). Maintenance consists of isolating a fault to a replaceable component, subassembly, or circuit card; removing and replacing the faulty item; and verifying the repair of the major assembly. In addition, certain procedures for maintaining other major assemblies of the TACFIRE system are also applicable to the ELP. These procedures, which are general in nature, are contained in chapter 3 and are referenced where applicable.

13-2. Troubleshooting Techniques. FI procedures are performed following detection of an ELP malfunction (refer to chapter 3). In some cases, the cause of trouble may be determined by visual inspection. In all other cases, the internal ELP self-test function or the M&D ELP FI test procedures will have to be performed. In addition, special FI procedures are required for the ELP in the VFMED and BDU configurations (refer to chapter 22).

13-3. Visual Inspection. Visual inspection of the ELP is performed to detect obvious hardware faults and indications of faults. Inspect the ELP as follows for:

a. Loose cable connection.

b. Incorrect switch settings.

c. Improperly seated circuit cards.

d. Status of front panel indicators.

e. Operation of front panel controls and indicators.

f. Message errors and/or poor quality printouts.

13-4. Fault Isolation. FI procedures are performed following detection of an ELP malfunction (refer to chapter 3). The cause of trouble may be determined: by visual inspection; by use of the internal ELP self test; by initiating the M&D FI test for DivArty and Bn FDCs; or, when configured for VFMED or BDU operation, by performing VFMED or BDU self-test procedures. Refer to table 13-1 for common ELP fault indications and corrective actions.

13-5. ELP Self Test. The ELP is tested for message errors and poor printout quality by means of the TEST switch (refer to self-test procedures in appropriate operator's manual). Table 13-2 lists fault symptoms detected during the self-test operation and corrective action required.

Table 13-1. ELP Hardware Fault Indications

Fault indication	Probable cause	Corrective action
	WARNING	
	Voltages in excess of 300 volts dc exist in the ELP. Injury to personnel may result if safety precautions are not observed. Set appropriate PCG switches to off before removing or replacing assemblies. Refer to table 3-16. If ELP is in VFMED or BDU, deenergize by setting power distribution box MAIN POWER switch to off.	
FAULT indicator is on and ELP does not operate.	Interlock switch is open.	Check that interlock switch is closed.
	Paper continuity is broken or jammed.	Check paper path. If paper is jammed, clear and reload.
	Faulty dc/dc converter.	Recycle power. If fault still indicated, replace dc/dc converter.
	Faulty circuit card.	Replace the following cards: Printer timing logic card (A3) Printer control logic card (A4) TACFIRE interface card (A6)
FAULT indicator is on, but ELP operates normally otherwise.	Faulty circuit card.	Replace motor drive card (A1)
FAULT indicator does not light when interlock switch is open, when paper continuity is broken or jammed, or when dc/dc converter is faulty.	FAULT indicator burned out.	Check indicator using ELP self-test (paragraph 13-5). If indicator does not light during self-test, replace indicator.
	Faulty circuit card.	Replace motor drive card (A1).
POWER ON indicator does not light, and ELP does not operate when power is turned on.	Cables not properly connected.	Check external power cable connections.
	Circuit breaker off.	Check appropriate PCG circuit breaker (refer to table 3-16).
	Faulty d/dc converter.	Recyle power. If fault still indicated, replace dc/dc converter.
	Faulty POWER ON switch.	Contact DS maintenance.
POWER ON indicator does not light, but ELP operates normally otherwise when power is turned on.	POWER ON indicator burned out.	Check indicator using ELP self-test (paragraph 13-5). If indicator does not light during self-test, replace indicator.
	Faulty circuit card.	Replace Motor Drive Card (A1).

654-1

Table 13-1. ELP Hardware Fault Indications – Continued

Fault indication	Probable cause	Corrective action
Helix inoperative (Helix does not turn and stop when power is initially turned on; self-test and line feed functions are also inoperative).	Faulty circuit cards.	Replace the following cards: Motor drive card (A1) Printer timing logic card (A3) Printer control logic card (A4) TACFIRE interface card (A6) LPIL control card (A7) AC interface card (A10)
	Faulty helix motor.	Contact DS maintenance.
Helix runs continuously.	Faulty circuit card.	Replace the following cards: Helix drive card (A2) Printer timing logic card (A3) Printer control logic card (A4) Character memory card (A5) TACFIRE interface card (A6) LPIL control card (A7) LPIL timing card (A8) AC interface card (A10)
	Magnetic sensor needs alignment	Contact DS maintenance.
Continuous line feed occurs with no printout.	Faulty circuit card.	Replace the following cards: Motor drive card (A1) Printer timing logic card (A3) Printer control logic card (A4) Character memory card (A5) TACFIRE interface card (A6) LPIL control card (A7) Data card (A9)
	Faulty LINE FEED switch.	Contact DS maintenance.
Continuous line feed occurs with random and/or unusual characters printed out.	Faulty circuit card.	Replace the following cards: Printer timing logic card (A3) Printer control logic card (A4) Character memory card (A5)
Paper does not advance when PAPER FEED switch is depressed.	Faulty circuit card.	Replace the following cards: Motor drive card (A1) Printer control logic card (A4)
	Faulty PAPER FEED switch.	Contact DS maintenance.
	Faulty stepper motor.	Contact DS maintenance.

A654-2

Table 13-1. ELP Hardware Fault Indications – Continued

Fault indication	Probable cause	Corrective action
No PAPER LOW indication when ELP paper supply has 14 ±4 or less forms remaining.	PAPER LOW indicator burned out.	Check indicator using ELP self-test (paragraph 13-5). If indicator does not light during self-test, replace indicator.
	Faulty circuit card.	Replace the following cards: Motor drive card (A1) Printer timing logic card (A3) Printer interface card (A6)
	PAPER LOW switch needs cleaning/adjustment.	Contact DS maintenance.
PAPER LOW indicator lights when ELP paper supply has more than 14 ±4 forms remaining.	Faulty circuit card.	Replace motor drive card (A1)
Self-test automatically comes on when power is turned on (self-test printout is continuous).	Faulty circuit card.	Replace the following cards: Printer control logic card (A4) TACFIRE interface card (A6)
ELP self-test inoperative when TEST switch is depressed.	Faulty circuit card.	Replace the following cards: Printer control logic card (A4) TACFIRE interface card (A6) LPIL control card (A7) LPIL timing card (A8)
	Faulty TEST switch.	Contact DS maintenance.
ELP has printing faults (no printing, printing contains errors, printing has poor quality).	Faulty circuit card.	Initiate M&D FI program for ELP (paragraph 13-6). Perform corrective action specified.
	Magnetic sensor needs adjustment.	Contact DS maintenance.
	Timing gear needs alignment.	Contact DS maintenance.
	Slip rings need adjustment.	Contact DS maintenance.
Upon opening case, visual inspection reveals burned wires, loose cards, etc.		Perform repairs within the scope of organizational maintenance. If repair is not within the scope of organizational maintenance, contact DS maintenance.

654-3

Table 13-2. ELP Self-Test Fault Indications

Fault indication	Probable cause	Corrective action
WARNING Voltages in excess of 300 volts dc exist in the ELP. Injury to personnel may result if safety precautions are not observed. Set power switch to off before removing or replacing assemblies.		
ELP self-test inoperative when TEST switch is depressed.	Faulty circuit card.	Replace the following cards: Printer control logic card (A4) TACFIRE interface card (A6) LPIL control card (A7) LPIL timing card (A8)
	Faulty TEST switch.	Contact DS maintenance.
One or more front panel indicators fail to light during self-test.	Faulty indicator.	Replace indicator.
	Faulty circuit card.	Replace motor drive card (A1)
Paper does not advance while printing in self-test.	Faulty circuit card.	Replace the following cards: Motor drive card (A1) Printer timing logic card (A3) Printer control logic card (A4) Character memory card (A5)
No printout during self-test; printout garbled or unreadable; printout contains incorrect characters.	Faulty circuit card.	Replace the following cards: Printer timing logic card (A3) Printer control logic card (A4) Character memory card (A5) TACFIRE interface card (A6)
Printout consists entirely of one character or symbol.	Faulty circuit card.	Replace the following cards: Printer control logic card (A4) Character memory card (A5) TACFIRE interface card (A6)
Printout has same character or symbol printed across a line.	Faulty circuit card.	Replace the following cards: Printer timing logic card (A3) Character memory card (A5) TACFIRE interface card (A6)
Characters appear as solid black squares in printout.	Faulty circuit card.	Replace the following cards: Printer timing logic card (A3) Printer control logic card (A4) Character memory card (A5)
Characters slurred or smeared	Faulty circuit card	Helix drive card (A2)

655-1

Table 13-2. ELP Self-Test Fault Indications – Continued

Fault indication	Probable cause	Corrective action
Some helixes not printing.	Faulty circuit card.	Replace the following cards: Helix drive card (A2) Character memory card (A5)
Printout skips every other line.	Faulty circuit card.	Replace the following cards: Printer control logic card (A4) Character memory card (A5)
No interline spacing between character rows of printout.	Faulty circuit card.	Replace printer timing logic card (A3)
No intercharacter space between characters of printout.	Faulty circuit card.	Replace printer timing logic card (A3)
Printing on skip fold.	Faulty circuit card.	Replace the following cards: Printer timing logic card (A3) Printer control logic card (A4)
	Magnetic sensor needs cleaning/ adjustment.	Contact DS maintenance.
More than 72 characters printed on one line.	Faulty circuit card.	Replace the following cards: Printer timing logic card (A3) Printer control logic card (A4) Character memory card (A5) TACFIRE interface card (A6)
Part of previous line appears on next line of printout.	Faulty circuit card.	Replace the following cards: Printer timing logic card (A3) Character memory card (A5)
Beginning or end of every 8 character missing in printout.	Timing gear out of alignment with magnetic sensor.	Contact DS maintenance.
Characters appear blurred and fade out.	Helix needs adjustment.	Contact DS maintenance
Paper skips erratically during printout.	Faulty circuit card.	Replace the following cards: Printer timing logic card (A3) Printer control logic card (A4)
	Magnetic sensor needs cleaning/ adjustment.	Contact DS maintenance.

655-2

Table 13-2. ELP Self-Test Fault Indications - Continued

Fault indication	Probable cause	Corrective action
Printout contains random faults.	Faulty circuit card.	Replace the following cards: Printer timing logic card (A3) Printer control logic card (A4)
	Magnetic sensor or microswitches need cleaning/adjustment.	Contact DS maintenance.
	Slip rings need adjustment.	Contact DS maintenance.
	Timing gear needs alignment.	Contact DS maintenance.

655-3

13-6. M&D Fault Isolation Program. The M&D fault isolation program is initiated when fault isolation or self-test procedures (paragraphs 13-4 and 13-5, respectively) do not isolate a fault. Refer to the appropriate operator's manual, and perform the following test:

a. From ACC or IOU, request M&D ELP FI test.

b. Observe and interpret CPU front panel DIAGNOSE STATUS indicators to obtain M&D error stop number.

c. Check test message printed on ELP for errors and/or poor quality.

NOTE

It is possible for the CPU front panel DIAGNOSE STATUS lamps to indicate a fault-free test and yet have a test message printout on the ELP with errors and/or poor quality.

d. If DIAGNOSE STATUS lamps indicate an error stop, use ELP section of M&D fault catalog (refer to operator's manual) to find error stop number and associated list of suspect circuit cards. Replace cards one at a time, repeating steps a through c each time a card is replaced, until fault is corrected.

e. If DIAGNOSE STATUS lamps indicate a fault free test but test message printout has errors and/or poor quality, refer to general instructions in front of ELP section of M&D fault catalog. Follow instructions contained therein for fault symptom identified.

13-7. VFMED and BDU Configuration Troubleshooting. The VFMED and BDU configurations do not have the capability of FI testing by the M&D program. ELP troubleshooting must be accomplished using hardware fault indications, the ELP self test, and the VFMED or BDU self test. Refer to the appropriate operator's manual for the VFMED or BDU self-test procedure. Hardware fault indications and required corrective actions are provided in table 13-1. Fault symptoms detected during the ELP self test are in table 13-2 together with the required corrective actions. Table 13-3 provides additional fault symptoms and corrective actions that may be used in conjunction with tables 13-1 and 13-2 to troubleshoot the ELP in the VFMED and BDU configurations.

NOTE

ELP troubleshooting should be accomplished within the VFMED or BDU configurations. When the VFMED or BDU is returned to the FDC for repair, reestablish communications with the FDC before starting the troubleshooting procedure.

13-8. Test After Repair. Verify ELP repair by running the ELP self test and also the M&D ELP FI or FD test. When the ELP is in the VFMED or BDU configuration, verify repair by running the ELP self test and also the VFMED or BDU self test. Refer to the appropriate operator's manual for VFMED or BDU self-test procedure.

Table 13-3. ELP Fault Indications for VFMED and BDU Configurations

Fault indication	Probable cause	Corrective action
WARNING Voltages in excess of 300 volts dc exist in the ELP. Injury to personnel may result if safety precautions are not observed. Set power switch to off before removing or replacing assemblies.		
RDT self-test indicates a fault with the ELP interface but ELP self-test runs fault free (Refer to chapter 22 of this manual for self-test procedures).	Faulty ELP circuit card. Faulty RDT circuit card.	Replace the TACFIRE interface card (A6) Refer to chapter 22 of this manual for RDT troubleshooting procedures. Perform corrective action specified.
RDT self-test indicates a fault with the ELP interface and ELP self-test also runs faulty (refer to chapter 22 of this manual for self- test procedures).	Faulty ELP circuit card.	Refer to paragraph 13-5 for ELP self-test troubleshooting procedure. Perform corrective actions as specified.

656

Section II. REPAIR

13-9. Introduction. This section consists of removal and replacement procedures for those items of the ELP that organizational maintenance personnel are authorized to replace. Authorized items are those with an O as the third character of the SMR code as shown in the RPSTL of appendix D, volume 4. Removal and replacement procedures for authorized items of the ELP that are common to other major assemblies of the TACFIRE system are contained in chapter 3. Refer to chapter 3 for removal and replacement procedures for indicator lens and lamps (fig. D-36). Preventive maintenance instructions are also included in this section and should be performed as scheduled (refer to chapter 3).

13-10. Removal and Replacement of ELP. The ELP is removed and replaced according to the following procedures.

a. *Removal.* Remove the ELP as follows:

WARNING

Press the POWER switch on the ELP to deenergize power before removing the ELP to prevent injury to personnel.

(1) Press POWER switch to turn off POWER indicator and to deenergize power.

CAUTION

Cable assemblies are routed and held in place with various types of cable bracket assemblies. Although a cable service-loop permits the extension of a major assembly with the cables connected, cables must be unhooked from the brackets if an assembly is to be extended beyond the limits of the service loop. Otherwise, damage to the cable assembly connector and to the mated connector might occur.

(2) Unhook external cable assemblies from cable brackets.

(3) Release two captive screws on ELP mounting base and extend ELP out from rack.

(4) Disconnect cable connections to ELP.

(5) Remove attaching hardware from ground jumper connections on ELP.

(6) Release four captive screws securing ELP to mounting base.

(7) Remove transit case from stowage area by releasing tie-down strap latches.

(8) Remove transit case cover by releasing four latch assemblies.

(9) Remove ELP from mounting base and place in transit case.

(10) Install transit case cover and secure with four latch assemblies.

b. *Replacement.* To replace the ELP, perform the procedure in a. above in reverse sequence.

13-11. Removal and Replacement of Circuit Card Assemblies. Circuit card assemblies are removed and replaced according to the following procedures.

a. *Removal.* Remove a circuit card assembly as follows (fig. D-35):

CAUTION

Observe special handling procedures in chapter 3 for circuit cards that employ MOS devices. If these types of cards are handled improperly, damage to the MOS devices may result from static charges. The only circuit card in the ELP using MOS devices is character memory card A5.

(1) Release two front spring-loaded latches and lift paper cover (6) up and to the rear.

WARNING

In the out-of-shelter configuration, extending the paper tray and door assembly from the housing can cause a forward out-of-balance condition. The unit can tip forward and cause injury or damage. When extending the unit, obtain a table from in-the-field sources and support the extended assembly on the table.

(2) Release four tension latches (32) and extend paper tray and door assembly from housing.

NOTE

Removal and replacement procedures are identical for printed circuit boards A1 through A10.

(3) Release lower circuit card lock-lever.

(4) Lift upper circuit card lever to disengage circuit card from connector.

(5) Pull circuit card straight out of slot.

b. *Replacement.* To replace a circuit card assembly, proceed as follows:

(1) Insert correct circuit card into proper card slot.

(2) Press circuit card in until seated fully into mating connector.

(3) Engage lower circuit card lock-lever.

CAUTION

Ensure that the lower circuit card lock-lever is fully engaged, or damage to the circuit card will occur when the access door and control panel assembly is retracted.

(4) Retract paper tray and door assembly and engage four tension latches (32).

(5) Lower cover (6) and engage both front spring-loaded latches.

13-12. Removal and Replacement of Paper Stacking Tray. The paper stacking tray is removed and replaced according to the following procedures.

a. *Removal.* Remove the paper stacking tray as follows (fig. D-35):

(1) Release four spring-loaded latches securing paper cover (6) in place and remove paper cover.

(2) Remove eight screws (7) and lockwashers (8).

(3) Remove paper stacking tray (9).

b. *Replacement.* To replace the paper stacking tray, perform the procedure in a. above in reverse sequence.

13-13. Removal and Replacement of DC/DC Converter. The dc/dc converter is removed and replaced according to the following procedures.

a. *Removal.* Remove the dc/dc converter as follows (fig. D-35):

(1) Refer to paragraph 13-10a and remove ELP from mounting base by performing procedure in steps (1) through (6).

(2) Disconnect external power cable to connector J1 on dc/dc converter (14).

CAUTION

The dc/dc converter is connected internally with an I/O power extension cable (item 42). Use care when removing dc/dc converter to prevent damage to the cable or mating connectors.

(3) Loosen six captive screws securing dc/dc converter (14) to line printer assembly (5A) and partially remove dc/dc converter to gain access to I/O power extention cable (view C).

(4) Disconnect I/O power extension cable (42) connector P2 from connector J2 on dc/dc converter.

(5) Remove dc/dc converter.

b. *Replacement.* To replace the dc/dc converter, perform the procedure in a. above in reverse sequence.

13-14. Preventive Maintenance. Preventive maintenance on the ELP is accomplished as a result of periodic cleaning procedures which must be performed after every eight hours of use. Refer to chapter 3 of either TM 11-7440-240-10 or TM 11-7440-241-10 for ELP cleaning procedures.

CHAPTER 14

DIGITAL PLOTTER MAP ORGANIZATIONAL MAINTENANCE

Section I. TROUBLESHOOTING

14-1. Introduction. Organizational maintenance personnel are authorized to repair the DPM by replacing the items coded as replaceable at the organizational level (refer to RPSTL, appendix D, volume 4). Maintenance consists of isolating a fault to a replaceable component, subassembly, or circuit card; removing and replacing the faulty item; and verifying the repair of the major assembly. In addition, certain procedures for maintaining other major assemblies of the TACFIRE system are also applicable to the DPM. These procedures, which are general in nature, are contained in chapter 3 and are referenced where applicable.

14-2. Troubleshooting Techniques. Several operator actions are required to run the DPM fault isolation test. Operator actions and responses are based on performing test instructions printed by the ELP and also displayed on the DE. Test results are displayed by the plotter assembly in the form of a predetermined test pattern. To perform the M&D FI test, proceed as follows:

NOTE

Although the DPM FI test exercises all units, only DCU card failures will be detected.

a. Initiate DPM FI test (refer to operator's manual).

b. Observe that DPM bridge automatically sequences through first test phase by slewing to center position, then up, down, and to the right.

c. Observe ELP printout or DE display for test instructions (fig. 14-1) and perform procedure as necessary. Refer to chapter 3 for M&D fault isolation procedures.

d. Verify that DPM test pattern (shown in fig. 14-2) is correct when performing those steps concerned with observing plotted results.

e. If malfunction can not be corrected by replacing circuit cards indicated in fault catalog, contact direct support maintenance.

14-3. DPM Operational Check. An operational check procedure is provided in table 14-1 to supplement troubleshooting procedures in paragraph 14-2. The primary purpose of this check is to ensure that the hand held controller provides proper control functions for the plotter assembly.

```
ACTIVATE MAP ALIGN SWITCH - TIME ALLOWED:  2Ø SEC MAX
ACTIVATE TEST PATTERN SWITCH - TIME ALLOWED:  2Ø SEC MAX
ACTIVATE MANUAL SWITCH - TIME ALLOWED:  2Ø SEC MAX
TURN LINE SWITCH TO STORE AND ACTIVATE ENTER COORD SWITCH -
TIME ALLOWED:  2Ø SEC MAX

ACTIVATE AUTO SWITCH - TIME ALLOWED:  2Ø SEC MAX
TURN LINE SWITCH TO DRAW - TIME ALLOWED:  2Ø SEC MAX
VERIFY THAT MANUAL LIGHT BLINKS AND AUTO LIGHT IS ON; THEN ACTIVATE
MANUAL SWITCH AND VERIFY THAT MANUAL LIGHT IS ON AND AUTO LIGHT BLINKS
- IF MANUAL AND AUTO LIGHTS FUNCTION AS INDICATED, ACTIVATE MAP ALIGN
SWITCH, WHICH CONTINUES TEST; IF LIGHTS MALFUNCTION, ACTIVATE TEST
PATTERN SWITCH, WHICH CAUSES FAULT STOP NUMBER OUTPUT
VERIFY THAT MANUAL LIGHT IS ON AND AUTO LIGHT IS OFF; THEN ACTIVATE AUTO
SWITCH AND VERIFY THAT MANUAL LIGHT IS OFF AND AUTO LIGHT IS ON; IF
MANUAL AND AUTO LIGHT FUNCTION AS INDICATED, ACTIVATE MAP ALIGN SWITCH,
WHICH CONTINUES TEST; IF LIGHTS MALFUNCTION, ACTIVATE TEST PATTERN
SWTICH, WHICH CAUSES FAULT STOP NUMBER OUTPUT
VERIFY LINE PLOT CORRECT;
     YES - ACTIVATE MAP ALIGN SWITCH
     NO  - ACTIVATE TEST PATTERN SWITCH - FAULT STOP NUMBER OUTPUT
VERIFY BOX WITH X CORRECT;
     YES - ACTIVATE MAP ALIGN SWITCH
     NO  - ACTIVATE TEST PATTERN SWITCH - FAULT STOP NUMBER OUTPUT
VERIFY UNIT AND HQ SYMBOL CORRECT
     YES - ACTIVATE MAP ALIGN SWITCH
     NO  - ACTIVATE TEST PATTERN SWITCH - FAULT STOP NUMBER OUTPUT
VERIFY CHARACTER LIBRARY CORRECT
     YES - ACTIVATE MAP ALIGN SWITCH
     NO  - ACTIVATE TEST PATTERN SWITCH - FAULT STOP NUMBER OUTPUT
VERIFY SYMBOL LIBRARY CORRECT
     YES - ACTIVATE MAP ALIGN SWITCH
     NO  - ACTIVATE TEST PATTERN SWITCH - FAULT STOP NUMBER OUTPUT
DPM   FI TEST PASSED; REFERENCE - 144ØØØ

1167
```

ELOAC034

Figure 14-1. DPM Fault Isolation Test Instructions

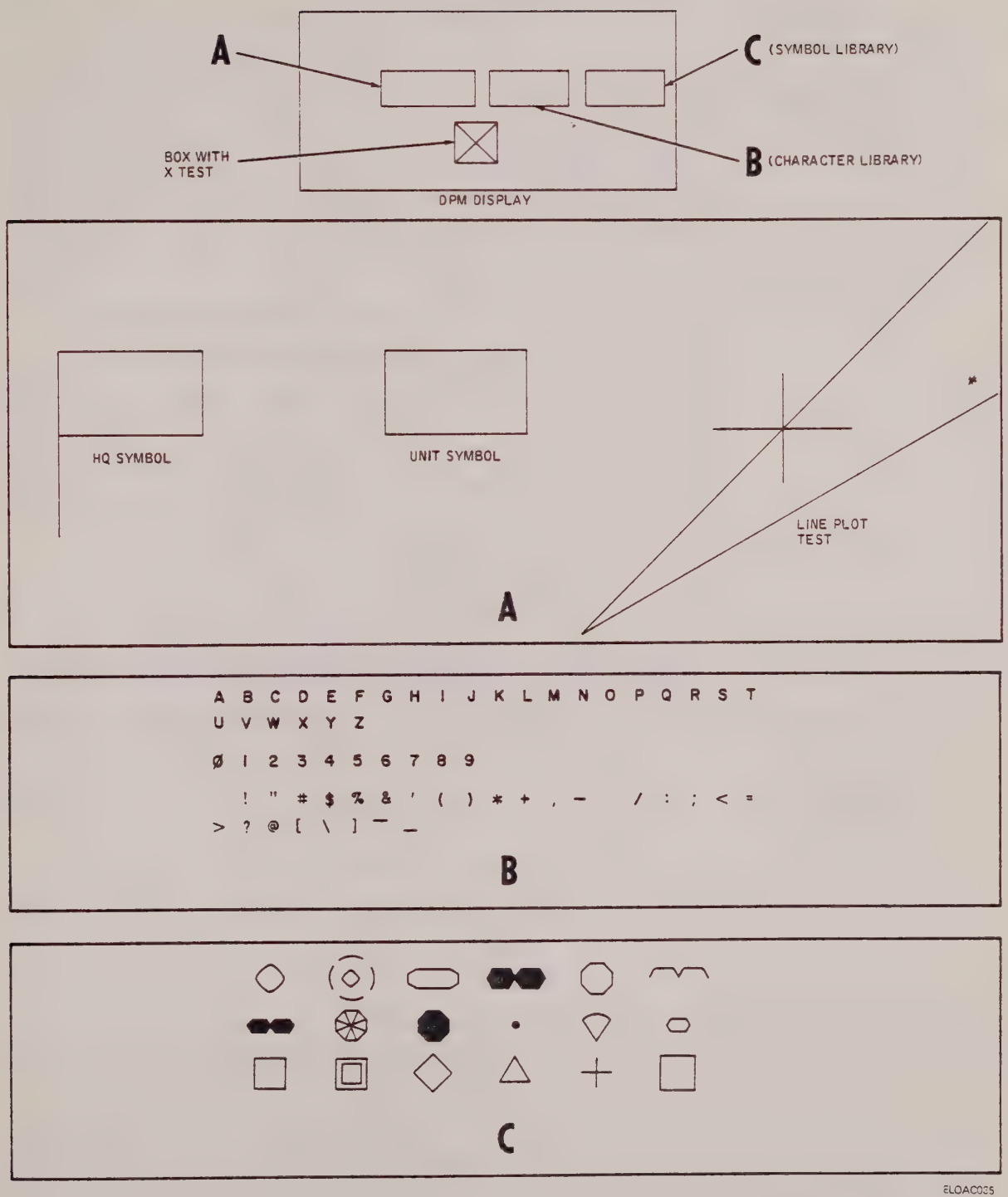

Figure 14-2. DPM Test Pattern Display

Table 14-1. DPM Operational Check

Step	Item	Procedure
1	Pre-set controls	Perform initial setup as follows: a. POWER-Off (plotter control panel) b. BRIDGE ENABLE-Off (plotter control panel) c. CHANNEL SELECT – assigned channel (DCU) d. SLEW RATE – MED (hand held controller)
2	Install test map	Install a scrap map or plain paper on the DPM
3	Hand-held control unit operation	Test DPM in manual mode as follows: a. Press POWER switch. Note that POWER and FAULT switch indicators light. b. Press FAULT switch. Note that FAULT switch indicator goes off and that FAULT switch indicator lights. c. Press BRIDGE ENABLE switch. Note that bridge assembly moves to 0-0 position (Southwest corner). d. Press MANUAL switch. Note that MANUAL switch indicator lights. e. Press MARKER UP switch. Note that MARKER UP switch indicator goes off, and that pen lowers to plotter surface. f. Press N switch. Note that DPM draws a line in a northerly direction. g. Press E switch. Note that DPM draws a line in an easterly direction. h. Press S switch. Note that DPM draws a line in a southerly direction. i. Press W switch. Note that DPM draws a line in a westerly direction. j. Press MARKER UP switch. Note that MARKER UP switch indicator lights, and that pen raises from the plotter surface.
4	Conclusion	Turn DPM off by pressing POWER switch. Note that POWER switch indicator lamp goes off. Remove test map installed during step 2.

650

Section II. REPAIR

14-4. Introduction. This section consists of removal and replacement procedures for those items of the DPM that organizational maintenance personnel are authorized to replace. Authorized items are those with an 0 as the third character of the SMR code as shown in the RPSTL of appendix D, volume 4. Removal and replacement procedures for authorized items of the DPM that are common to other major assemblies of the TACFIRE system are contained in chapter 3. Refer to chapter 3 for removal and replacement procedures for:

a. Removal and replacement of circuit cards.

b. Removal and replacement of dc/dc converters.

c. Removal and replacement of indicator lenses and boots.

d. Removal and replacement of lamps.

e. Removal and replacement of knobs.

WARNING

High voltages exist in the DPM. DEATH BY CONTACT may result if personnel fail to observe safety precautions. Eliminate shock hazard when servicing the DPM by turning off power to the DPM. To turn off power, press the DPU POWER switch to turn off the indicator and then set the following PCG switches to their off (down) position.

	AC PRIME POWER 270 VDC		AC OR DC PRIME POWER 28 VDC		DC PRIME PWR 270 VDC	
Major unit	Bn	DivArty	Bn	DivArty	Bn	DivArty
DCU	(J2)	(J2)	(J1-J4)	(J1-J4)	(J2)	(J2)
DPU	—	—	(J8)	(J8)	—	—

14-5. Removal and Replacement of Major Assemblies. Refer to operator's manuals for procedures to remove and replace DPM major assemblies. These procedures are included for in-shelter to out-of-shelter installation and for out-of-shelter to in-shelter installation.

14-6. Removal and Replacement of Plotting Board Assembly. The plotting board assembly is removed and replaced according to the following procedures.

a. *Removal.* Remove the plotting board assembly from the case assembly as follows (fig. D-29):

CAUTION

Do not attempt this procedure unless a test stand is available for supporting the plotting board assembly.

(1) Disconnect cables from control panel.

(2) Remove four nuts (7) that secure plotting board assembly (88) to case assembly (5).

CAUTION

Plotter assembly weighs 180 pounds and requires two people for sliding from case assembly.

(3) Lift plotting board assembly (88) by handles out from case assembly (5).

b. *Replacement.* To replace the plotting board assembly, perform the procedure in a. above in reverse sequence.

CAUTION

Before installing plotting board assembly, move bridge assembly to the extreme right side to prevent bridge assembly cable binding between plotter and case.

14-7. Removal and Replacement of Map Lamp and Lens. The map lamp and lens are removed and replaced according to the following procedures.

a. *Removal.* Remove the map lamp and lens as follows (fig. D-27):

(1) Release spring-clips and remove hood and lens assembly.

(2) Remove lens (15).

(3) Remove lamp (14).

b. *Replacement.* To replace map lamp and lens, perform the procedure in a. above in reverse sequence.

14-8. Removal and Replacement of Floodlight Lamps and Lenses. The floodlight lamps and lenses are removed and replaced according to the following procedures.

a. *Removal.* Remove floodlight lamps and lenses as follows (fig. D-27):

(1) Remove lens assembly (50) by releasing two captive screws.

(2) Remove lamps (49).

b. *Replacement.* To replace floodlight lamps and lenses, perform the procedure in a. above in reverse sequence.

14-9. Removal and Replacement of DPU Eyepiece Lamp. The DPU eyepiece lamp is removed and replaced according to the following procedures.

a. *Removal.* Remove eyepiece lamp as follows (fig. 14-3):

(1) Loosen nut securing lamp hood (and light assembly) to clamp on eyepiece assembly.

(2) Unscrew and remove lamp hood from light assembly.

(3) Remove lamp.

NOTE

Refer to figure D-29 for part number identification (lamp is item 112).

b. *Replacement.* To replace eyepiece lamp, perform the procedure in a. above in reverse sequence.

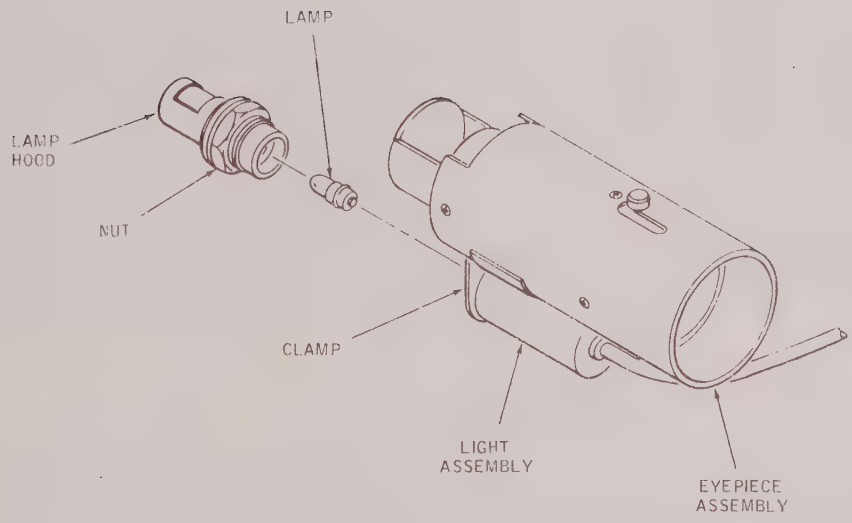

Figure 14-3. DPU Eyepiece Light Assembly

CHAPTER 15

ELECTRONIC TACTICAL DISPLAY ORGANIZATIONAL MAINTENANCE

Section I. TROUBLESHOOTING

15-1. Introduction. Organizational maintenance personnel are authorized to repair the ETD by replacing the items coded as replaceable at the organizational level (refer to RPSTL, appendix D, volume 4). Maintenance consists of isolating a fault to a replaceable component, subassembly, or circuit card; removing and replacing the faulty item; and verifying the repair of the major assembly. In addition, certain procedures for maintaining other major assemblies of the TACFIRE system are also applicable to the ETD. These procedures, which are general in nature, are contained in chapter 3 and are referenced where applicable. If circuit cards A1316, A1320, A1324, or A1328 are replaced and the display is distorted after their replacement, contact direct support maintenance for adjustment.

15-2. Service Access. When troubleshooting and repairing, the ETD must be swung away from the display group shelter wall, and the major assembly must be extended out of the case assembly (fig. 15-1). Reverse procedure to secure ETD after maintenance is completed.

WARNING

High voltages exist in the ETD. DEATH ON CONTACT may result if personnel fail to observe safety precautions. To eliminate shock hazard when replacing assemblies in or servicing the ETD, turn off power to the ETD and then ground points of high potential. To turn off power, press the ETD front-panel POWER switch to turn off the indicator; then set the following PCG front-panel switches to their off (down) position:

AC PRIME POWER 270 VDC (J4)

AC OR DC PRIME PWR 28 VDC (J1-J4)

DC PRIME PWR 270 VDC (J4)

a. Release eight captive bolts that secure rack containing ETD and ELP to display group shelter wall. Swing rack away from shelter wall on its swivel mount.

b. Release 34 captive fasteners that secure ETD chassis (wired console assembly) to case assembly. Extend chassis out of case assembly to locked position.

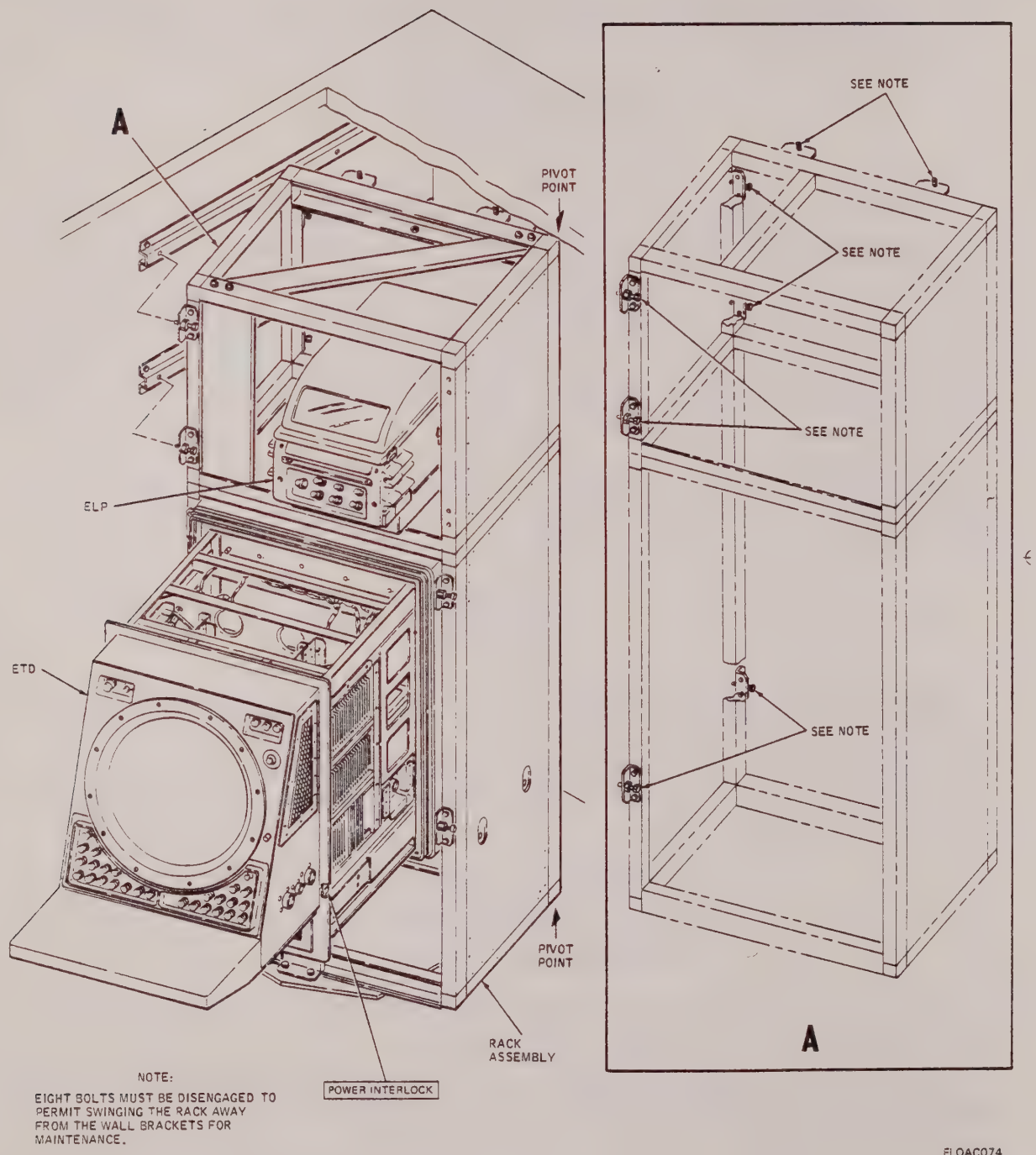

Figure 15-1. ETD Service Access Position

c. Support ETD chassis bottom panel to prevent damage when panel drops. Remove 15 screws that secure panel to ETD chassis. Carefully lower it about its hinges for access to three dc/dc converters.

d. If ETD is to be operated in extended position, pull POWER INTERLOCK switch to OVERRIDE position (fig. 15-1).

15-3. Troubleshooting Techniques. FI procedures are performed following detection of an ETD malfunction (refer to chapter 3). In some cases, the cause of trouble may be determined by visual inspection. In all other cases, the M&D ETD FI test must be run.

15-4. Visual Troubleshooting. Before initiating the M&D ETD FI test, inspect the ETD visually for obvious faults and indications of faults. Check for loose or incorrect cable connections, incorrect switch settings, and improperly seated circuit cards. Power faults are indicated by fault indicators on the dc/dc converter and the series regulator circuit cards, by failure of the ETD to turn on when power is applied, or by loss of front panel indicators. If a power fault is suspected, recycle the power. If the power fault indicator goes off after recycling, resume normal operation. If a power fault is still indicated, troubleshoot as follows:

WARNING

High voltages exist in the ETD. DEATH ON CONTACT may result if personnel fail to observe safety precautions. To eliminate shock hazard when servicing the ETD, turn off power to the ETD and then ground points of high potential. Turn off power to ETD before replacing assemblies. To turn off power, press the ETD front-panel POWER switch to turn off the indicator, then set the following PCG front-panel switches to their off (down) position:

AC PRIME POWER 270 VDC (J4)
AC OR DC PRIME PWR 28 VDC (J1-J4)
DC PRIME PWR 270 VDC (J4)

a. Place ETD in service access position (paragraph 15-2).

b. On ETD bottom panel assembly, observe fault indicators on each dc/dc converter, A1A2, A1A3, and A1A4.

c. If INT fault indicator is lighted, replace associated dc/dc converter (para 15-10).

d. If EXT fault indicator is lighted, perform following steps:

(1) On right card bay (fig. 15-2), observe fault indicators on series regulator circuit cards A2320, A2322, A2324, and A2326.

(a) If any series regulator circuit card fault indicator is lighted, replace associated circuit card (refer to chapter 3).

(b) If no series regulator circuit card fault indicator is lighted, proceed to step (2) below.

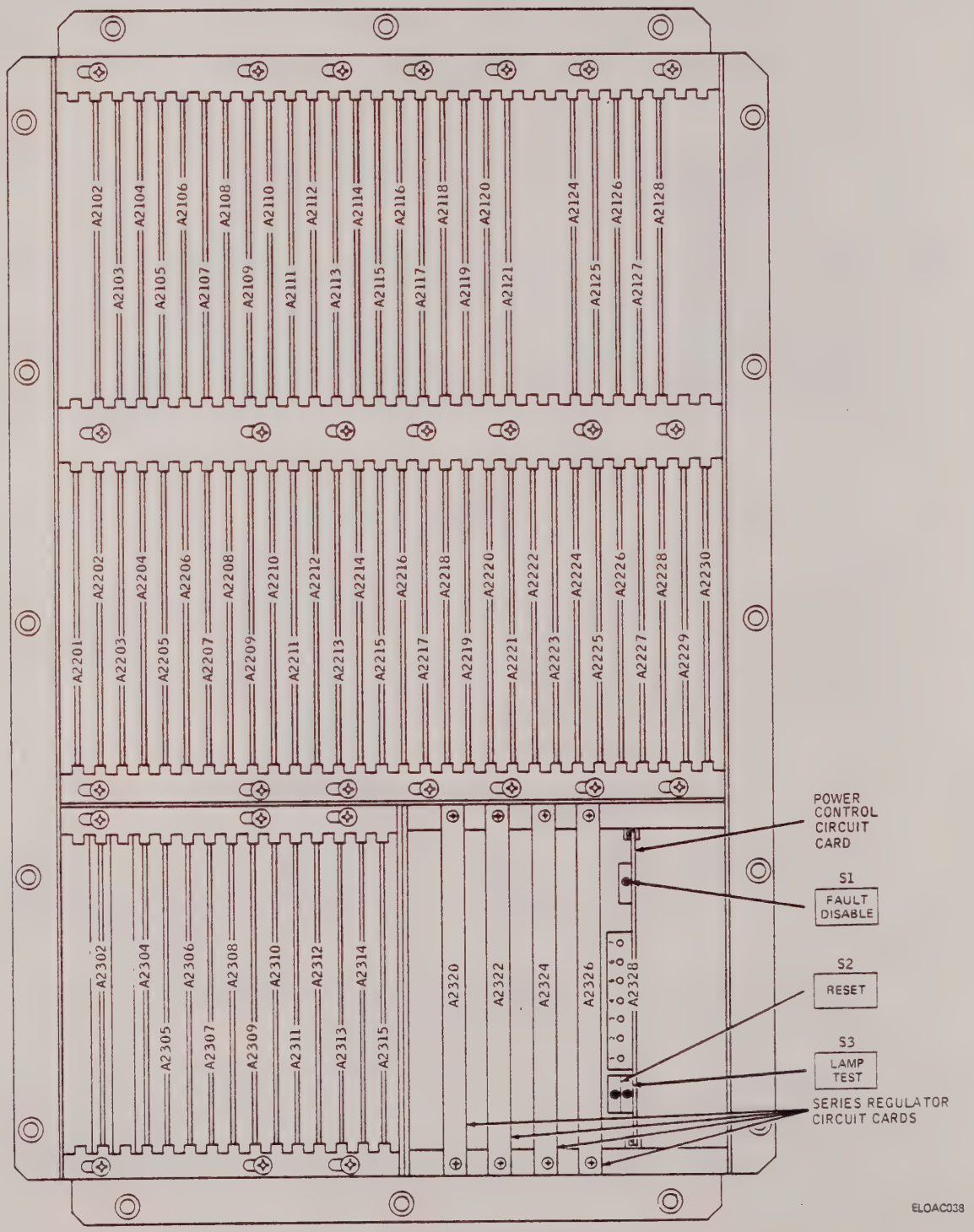

Figure 15-2. Right Card Bay

(2) Observe fault indicators 1 thru 7 on power control circuit card A2328.

(a) If any power control circuit card fault indicator is lighted, refer to table 15-1 to interpret fault indications.

(b) If no power control circuit card fault indicator is lighted, perform lamp test by holding down FAULT DISABLE switch S1 and pressing LAMP TEST switch S3.

(c) If any of power control circuit card fault indicators still fail to light, replace power control circuit card A2328.

(d) If power control circuit card A2328 passes lamp test in step (b) above, press RESET switch S2 while holding down FAULT DISABLE switch S1. Then release switch S1.

e. If power control circuit card fault indicators are not lighted or the fault cannot be isolated using above procedures, press ETD front panel LAMP TEST switch to check front panel indicators.

(1) If some but not all indicators light, replace lamps as required.

(2) If no indicators light except POWER, yet data is properly displayed on crt, replace series regulator circuit card A2324.

f. If crt data is not properly displayed, set 12000 VOLT MAINT SWITCH to OFF and repeat lamp test of ETD front panel indicators by pressing LAMP TEST switch.

(1) If indicators now light replace dc/dc converter A1A4.

(2) Set 12000 VOLT MAINT SWITCH to ON and verify ETD data display operation.

(3) If ETD still does not display data, notify DS maintenance (fault is in high voltage power supply A1A11 or deflection amplifier power supply A1A8).

(4) If ETD displays data but indicators still fail to light, set 12000 VOLT MAINT SWITCH to ON and continue with steps g thru i below.

g. On ETD front panel check POWER indicator.

(1) If POWER indicator is not lighted, recycle power.

(2) If POWER indicator still does not light, replace POWER lamp of switch S2.

(3) If POWER indicator still does not light, replace dc/dc converter A1A2.

h. Perform lamp test on power control circuit card A2328 by pressing LAMP TEST switch S3.

(1) If some but not all power control circuit card lamps light, replace power control circuit card A2328.

(2) If no power control circuit card lamps light, replace power control circuit card A2328 and repeat lamp test. If all lamps still fail to light, replace dc/dc converter A1A3.

i. If above procedures fail to isolate fault, replace following assemblies in order shown unless already replaced. Verify operation after each replacement.

Power control circuit card A2328
Series regulator circuit card A2320
Series regulator circuit card A2322
Series regulator circuit card A2326
Series regulator circuit card A2324
Dc/dc converter A1A2
Dc/dc converter A1A3
Dc/dc converter A1A4

15-5. FI Using the M&D Program. If visual inspection does not locate the fault in the ETD, run the M&D ETD FI test as follows:

a. Place ETD in service access position (paragraph 15-2).

b. From IOU, request ETD FI test provided by M&D program (refer to operator's manual).

c. Observe and interpret DIAGNOSE STATUS indicators on CPU front panel, or use FI message on ELP printout to obtain M&D error stop number.

d. Use ETD section of M&D fault catalog (operator's manual) to find error stop number and associated list of suspect circuit cards.

WARNING

High voltages exist in the ETD. DEATH ON CONTACT may result if personnel fail to observe safety precautions. To eliminate shock hazard when servicing the ETD, turn off power to the ETD and then ground points of high potential. Turn off power to ETD before replacing assemblies. To turn off power, press the ETD front-panel POWER switch to turn off the indicator, then set the following PCG front-panel switches to their off (down) position:

AC PRIME POWER 270 VDC (J4)
AC OR DC PRIME PWR 28 VDC (J1-J4)
DC PRIME PWR 270 VDC (J4)

Table 15-1. ETD Visual Troubleshooting

Circuit card A2328 indicator	Probable cause	Corrective action
	WARNING High voltages exist in the ETD. DEATH ON CONTACT may result if personnel fail to observe safety precautions. To eliminate shock hazard when servicing the ETD, turn off power to the ETD and then ground points of high potential. Turn off power to ETD before replacing assemblies. To turn off power, press the ETD front-panel POWER switch to turn off the indicator, then set the following PCG front-panel switches to their off (down) position: AC PRIME POWER 270 VDC (J4) AC OR DC PRIME PWR 28 VDC (J1-J4) DC PRIME PWR 270 VDC (J4)	
1	Faulty series regulator circuit card.	Replace circuit card A2320 or A2324.
2	Faulty high voltage power supply.	Contact DS maintenance for replacement.
3	Deflection amplifier overheating.	Contact DS maintenance for replacement.
4	Faulty dc/dc converter.	Replace dc/dc converter that has INT indicator lighted.
5	Faulty deflection amplifier power supply.	Contact DS maintenance for replacement.
6	Faulty series regulator circuit card.	Replace circuit card A2320 or A2322.
7	Faulty series regulator circuit card.	Replace circuit card A2322 or A2326.

NOTES: 1. If indicators 2 and 5 come on, replace dc/dc converter A1A4.

2. If all seven indicators come on, replace power control circuit card A2328.

A609

e. Isolate and replace faulty digital circuit card using MTS, or isolate and replace faulty analog circuit card (chapter 3).

f. Repeat steps b thru e until no fault is indicated on ELP printout or CPU front-panel indicators.

15-6. FI Using the Troubleshooting Chart. The M&D FI test for the ETD localizes the cause of trouble to a group of faulty digital or analog circuit cards. However, some ETD malfunctions that might occur cannot be isolated directly to, or might not be caused by, faulty circuit cards alone. The troubleshooting chart in table 15-2 lists the faults that may be observed or detected during operation of the ETD, the ETD self-test, and operational tests. Table 15-2 also lists the required corrective action. If the M&D FI test does not isolate the fault, troubleshoot further using table 15-2. If the corrective actions of table 15-2 do not correct the fault, contact direct support maintenance.

Table 15-2. ETD Troubleshooting Chart

Fault indication	Probable cause	Corrective action
	WARNING	
High voltages exist in the ETD. DEATH ON CONTACT may result if personnel fail to observe safety precautions. To eliminate shock hazard when servicing the ETD, turn off power to the ETD and then ground points of high potential. Turn off power to ETD before replacing assemblies. To turn off power, press the ETD front-panel POWER switch to turn off the indicator, then set the following PCG front-panel switches to their off (down) position: AC PRIME POWER 270 VDC (J4) AC OR DC PRIME PWR 28 VDC (J1-J4) DC PRIME PWR 270 VDC (J4)		
1. Display blurred.	ETD front-panel controls misadjusted.	Adjust ETD front-panel FOCUS and ASTIG controls alternately for sharp screen image in center and at outer edges.
2. No display on crt with ETD TEST switch on, POWER switch on, and forced air fan operating.	12000 VOLT MAINT switch S4 is OFF (down).	Set S4 on right side of chassis to ON (up). If S4 is already ON, proceed to next probable cause.
	ETD front-panel BRT control is set too low.	Adjust BRT control until display appears. If unable to obtain display, proceed to next probable cause.
	Video circuit cards defective.	Replace circuit cards A1304 and A1306 one at a time.
3. Display shows overlap, distortion, symbols out of position, or intensity variation.	Analog circuit cards defective.	Replace the following circuit cards one at a time: A1304, A1306, A1316, A1324, and A1328.
4. Wide horizontal line only, or vertical vectors distorted when ETD test pattern is displayed.	Analog circuit cards defective.	Replace circuit cards A1320, A1324, A1328, and A1330 one at a time.
	Digital circuit cards defective.	Check all digital circuit cards in left-hand circuit card rack using MTS. Replace circuit cards as required.
5. Wide vertical line only, or horizontal vectors distorted when ETD test pattern is displayed.	Analog circuit cards defective.	Replace circuit cards A1316, A1318, A1326, and A1328 one at a time.
	Digital circuit cards defective.	Check all digital circuit cards in left-hand circuit card rack using MTS. Replace circuit cards as required.
6. Loss of both horizontal and vertical sweeps resulting in spots on crt or in deformed or collapsed display while ETD TEST switch is on.	Character stroke integrator circuit cards defective.	Replace circuit cards A1310 and A1312 one at a time.
7. No vector lines appear on crt while remainder of test pattern is normal.	Line generator control circuit card defective.	Replace circuit card A1328.

610-1

Table 15-2. ETD Troubleshooting Chart – Continued

Fault indication	Probable cause	Corrective action
	Switch input circuit cards defective.	Check all digital circuit cards using MTS. Replace circuit cards as required.
8. Horizontal portions of characters distorted while remainder of test pattern is normal.	Vertical stroke integrator circuit card defective.	Replace circuit card A1312. If distortion persists, proceed to next probable cause.
	Character generator and display programmer circuit cards defective.	Check all digital circuit cards using MTS. Replace circuit cards as required.
9. Vertical portions of characters distorted while remainder of test pattern is normal.	Horizontal stroke integrator circuit card defective.	Replace circuit card A1310. If distortion persists, proceed to next probable cause.
	Character generator and display programmer circuit cards defective.	Check all digital circuit cards using MTS. Replace circuit cards as required.
10. No characters appear on crt while remainder of test pattern is normal.	Stroke integrator circuit cards defective.	Replace circuit cards A1310 and A1312 one at a time.
	Video compensation circuit card A1306 defective.	Replace circuit card A1306.
	Character generator and display programmer circuit cards defective.	Check all digital circuit cards in left-hand card rack using MTS. Replace circuit cards as required.

610-2

Section II. REPAIR

15-7. Introduction. This section consists of removal and replacement procedures for those items of the ETD that organizational maintenance personnel are authorized to replace. Authorized items are those with an 0 as the third character of the SMR code as shown in the RPSTL of appendix D, volume 4. Removal and replacement procedures for authorized items of the ETD that are common to other major assemblies of the TACFIRE system are contained in chapter 3. Refer to chapter 3 for removal and replacement procedures for case assembly, circuit cards, indicator lenses and boots, lamps, and knobs. If circuit cards A1316, A1320, A1324, or A1328 are replaced and the display is distorted after their replacement, contact direct support maintenance for adjustment.

WARNING

High voltages exist in the ETD. DEATH ON CONTACT may result if personnel fail to observe safety precautions. To eliminate shock hazard when servicing the ETD, turn off power to the ETD and then ground points of high potential. To turn off power, press the ETD front-panel POWER switch to turn off indicator, then set the following PCG front-panel switches to their off (down) position:

AC PRIME POWER 270 VDC (J4)

AC OR DC PRIME PWR 28 VDC (J1-J4)

DC PRIME PWR 270 VDC (J4)

15-8. Removal and Replacement of ETD. The ETD is removed from and replaced into the case assembly according to the following procedure (figure 15-1).

WARNING

Be extremely careful of high voltages present in the equipment. Be aware of possible residual charges retained in the crt after operating power has been removed. Discharge all high voltage points with a grounded discharge probe before touching.

a. *Removal.* Remove the ETD as follows:

(1) Place ETD in service access position (paragraph 15-2).

(2) Disconnect cables connected to J1, J2, and J3 on ETD.

WARNING

A minimum of four men are required to lift and remove the ETD from its case assembly. Do not use the shelf at the front of the ETD as a lift point.

(3) Release both spring-loaded slide stops (accessible through slide rail cutouts). Continue sliding ETD out of case assembly until free.

b. *Replacement.* To replace the ETD, perform the following procedure:

WARNING

A minimum of four men are required to lift and replace the ETD into its case assembly. Do not use the shelf at the front of the ETD as a lift point.

(1) To install replacement ETD, perform procedures in a. above in reverse sequence.

(2) Verify operation of replacement ETD by running M&D ETD FI test (refer to operator's manual).

15-9. Removal and Replacement of Light Pen Assembly. To remove the light pen assembly, disconnect light pen assembly (fig. D-26, 7) connector from console receptacle J4. Install replacement by connecting light pen assembly connector to console receptacle J4.

15-10. Removal and Replacement of DC/DC Converter. Each of the three dc/dc converters is removed and replaced in an identical manner according to the following procedures.

a. *Removal.* Remove a dc/dc converter as follows (D-26, 31 and 34):

(1) Press POWER switch on ETD front panel to off position (indicator goes off).

(2) Set following PCG front-panel switches to their off (down) position.

AC PRIME POWER 270 VDC (J4)

AC OR DC PRIME PWR 28 VDC (J1-J4)

DC PRIME PWR 270 VDC (J4)

(3) Support ETD chassis bottom panel to prevent damage when panel drops. Remove 15 screws that secure panel and lower it carefully.

(4) Loosen two each retaining screws securing connectors on appropriate dc/dc converter and disconnect connectors.

(5) Support dc/dc converter with hand to prevent dropping. Release four captive mounting-screws securing dc/dc converter into bracket.

(6) Remove dc/dc converter.

b. *Replacement.* To replace a dc/dc converter, perform the following procedure:

(1) To install replacement dc/dc converter, perform procedure in a. above in reverse sequence.

(2) Verify operation of replacement dc/dc converter by running M&D ETD FI test (refer to operator's manual).

15-11. Removal and Replacement of Air Filters. The inlet and exhaust air filters are removed and replaced according to the following procedures.

WARNING

Removal of the air filters exposes high voltage circuits. Ensure that power is off.

a. *Removal.* Remove the air filters as follows:

(1) Press POWER switch on ETD front panel to off position (indicator goes off).

(2) Set following PCG front-panel switches to their off (down) position.

AC PRIME POWER 270 VDC (J4)

AC OR DC PRIME PWR 28 VDC (J1-J4)

DC PRIME PWR 270 VDC (J4)

(3) If left exhaust filter is to be removed, place ETD in service access position (paragraph 15-2).

CAUTION

Exercise care when removing air filters so as not to damage the emi gasket in the periphery of the filter flange.

(4) Release captive screws on inlet filters (fig. 15-3) and remove from ETD.

(5) Release captive screws on kneehole exhaust filters (fig. 15-3) and remove ETD.

(6) Release captive screws on exhaust filters (fig. D-26, 8 and 36) and remove from ETD.

b. *Replacement.* To replace the air filters, perform the procedure in a. above in reverse sequence.

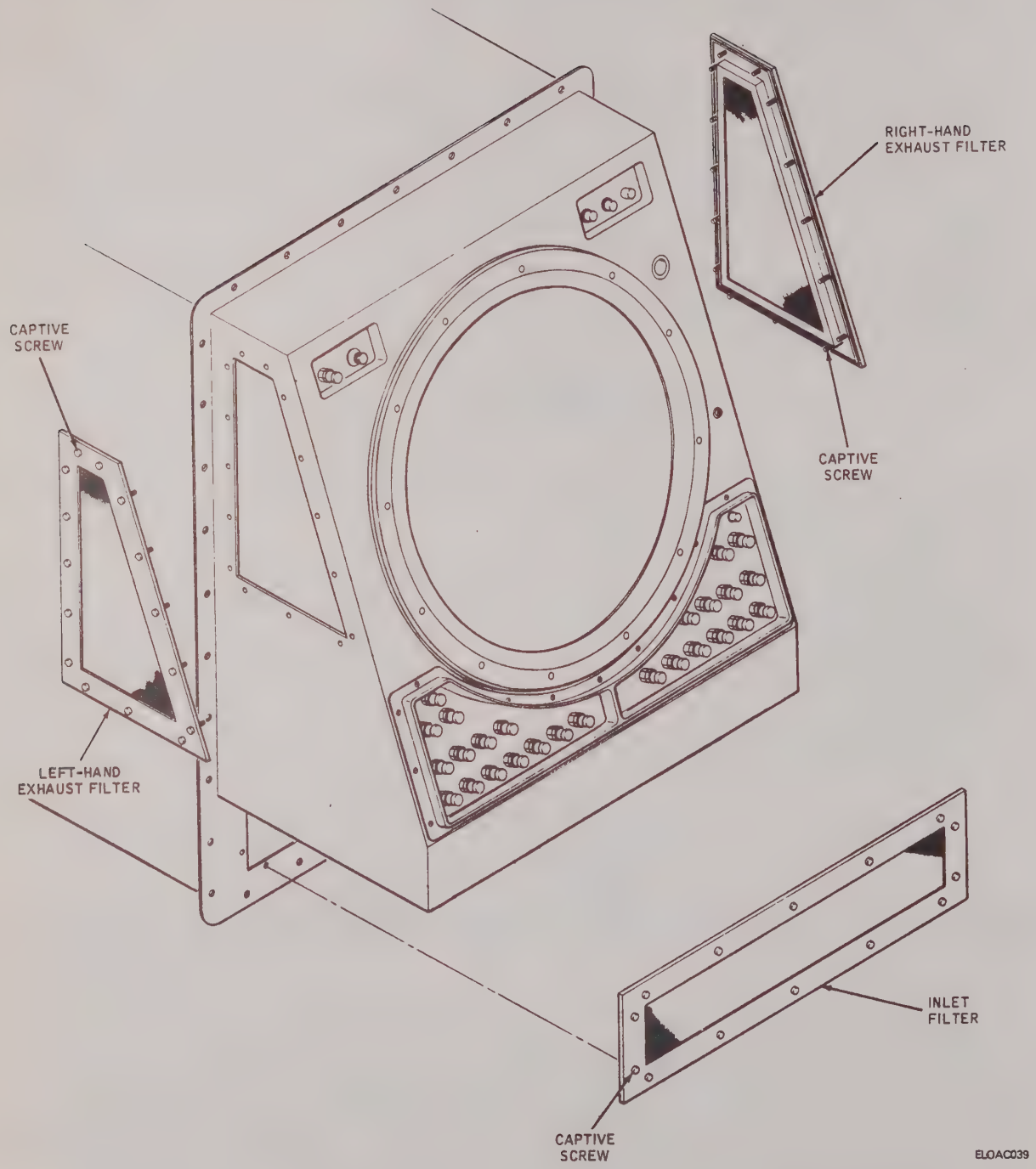

Figure 15-3. ETD Air Filters (Sheet 1 of 2)

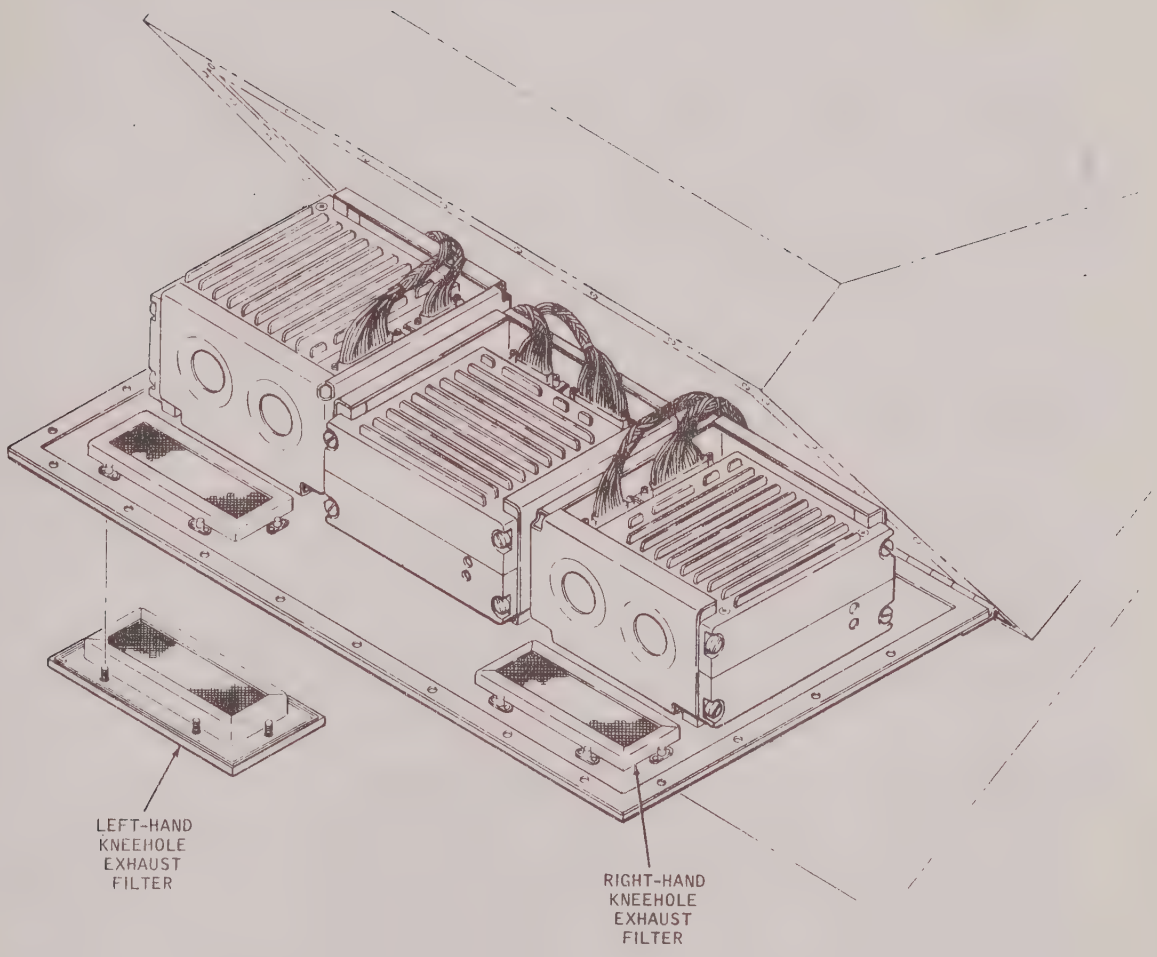

Figure 15-3. ETD Air Filters (Sheet 2 of 2)

CHAPTER 16

POWER CONVERTER GROUP ORGANIZATIONAL MAINTENANCE

Section I. TROUBLESHOOTING

16-1. Introduction. Organizational maintenance personnel are authorized to repair the PCG by replacing the items coded as replaceable at the organizational level (refer to RPSTL, appendix D, volume 4). Maintenance consists of isolating a fault to a replaceable component, subassembly, or circuit card; removing and replacing the faulty item; and verifying the repair of the major assembly. In addition, certain procedures for maintaining other major assemblies of the TACFIRE system are also applicable to the PCG. These procedures, which are general in nature, are contained in chapter 3 and are referenced where applicable.

16-2. Troubleshooting Techniques. There are no M&D program FD or FI tests provided for isolating PCG failures. In some cases, the cause of trouble may be determined by visual inspection. In all other cases, perform the PCG test procedure in paragraph 16-4. After repair, perform the operability test procedure in paragraph 16-5.

16-3. Visual Inspection. Inspect the PCG visually for obvious faults and indications of faults. Check for loose or incorrect cable connections and incorrect switch settings. Power faults are directly indicated by lighted fault indicators on the dc/dc converters and on the PCG front panel. If a power fault is indicated (CONV FAULT indicator on, PWR ON lamp off, and/or dc/dc converter fault light on), recycle the power. If after the power is recycled, the power fault indication is cleared, resume normal operation. If a power fault remains, initiate troubleshooting procedures.

16-4. PCG Troubleshooting Tests. The eight dc/dc converters in the PCG operate in pairs to supply 280 vdc (±140 vdc) to four separate groups of units. Refer to table 16-1 for a listing of system units that are affected by a failure of the corresponding dc/dc converter. When a dc/dc converter failure is suspected, troubleshoot the PCG in accordance with the following procedure.

a. With power on, loosen 12 captive bolts and carefully lower hinged front panel of PCG to open position.

b. Locate suspected dc/dc converters (see fig. D-17 for location).

c. Determine if any of four DC PRIME PWR 270 VDC circuit breakers on PCG front panel is tripped. If no circuit breakers are tripped, check suspect dc/dc converters for lighted failure indicator.

Table 16-1. PCG Troubleshooting

DC PRIME PWR 270 VDC circuit breaker	Unit affected by failure			Probable cause
	Bn shelter computer group	DivArty shelter computer group	DivArty shelter display group	Dc/dc converter (connector)
(J1)	IOU/KG-31	IOU/KG-30	–	P9, P10
(J2)	DCU/ARMM	MTS/ARMM 1, 2	DCU	P15, P16
(J3)	MTS/MCMU A	MCMU A, B	MTS	P13, P14
(J4)	MCMU B, C	MCMU C, D	ETD	P11, P12

613

d. If an indicator is lighted, proceed as follows:

(1) Set POWER switch on IOU front panel to off position.

(2) Set AC MAIN (J12) and DC MAIN A BUS and B BUS circuit breakers on PCG front panel to off (down).

(3) Set 28 VDC LIGHTS 10A (J10) EMER circuit breaker on PCG front panel to on (up); note that shelter emergency lights come on.

(4) Replace dc/dc converter having lighted failure indicator with another unit known to be operational. Refer to paragraph 16-7 for replacement procedures.

e. If any of four DC PRIME PWR 270 VDC circuit breakers on PCG front panel are tripped, and dc/dc converter failure indicators are inoperative, proceed as follows:

(1) Set AC MAIN (J12) and DC MAIN A BUS and B BUS circuit breakers on PCG front panel to off (down).

(2) Set 28 VDC LIGHTS 10A (J10) EMER circuit breaker on PCG front panel to on (up); note that shelter emergency lights come on.

(3) Replace either of two suspect dc/dc converters. Refer to paragraph 16-7 for replacement procedures.

(4) Set AC MAIN (J12), DC MAIN A BUS and B BUS, and appropriate DC PRIME PWR 270 VDC circuit breakers on PCG front panel to on (up).

(5) If any of four DC PRIME PWR 270 VDC circuit breakers trips, replace remaining suspect dc/dc converter per steps (1) thru (4).

16-5. PCG Operability Tests. Perform the following procedures to verify proper operation of the PCG:

a. Verify that generator and both truck engines are operating.

b. Turn on all PCG front panel circuit breakers and set BLACKOUT OVERRIDE switch to down position.

c. Verify that following PCG indicators are lighted:

AC MAIN PWR ON

AC MAIN PWR AVAIL ABC

AC MAIN PH ROTATION ABC

DC MAIN PWR ON A BUS

DC MAIN PWR ON B BUS

DC MAIN PWR AVAIL (J14) and (J15)

d. Verify that RUNNING TIME meter is operating.

e. Verify that following PCG indicators are not lighted:

BLACKOUT OVERRIDE

CONV FAULT

EMER POWER

f. Press each indicator listed in step e. above and verify that each lights while pressed.

g. Verify that all FDC equipment is running and no equipment power fault indicators are on.

h. Sequentially set four AC PRIME POWER 270 VDC circuit breakers to off (down). After each circuit breaker is set to off, verify that CONV FAULT indicator does not light and all FDC equipment is operating. Set circuit breakers to on position.

i. Sequentially set four DC PRIME PWR 270 VDC circuit breakers to off (down). After each circuit breaker is set to off, verify that all FDC equipment is operating. Set circuit breakers to on position.

j. Set AC MAIN (J12) circuit breaker to off (down). Verify that AC MAIN PWR ON indicator goes off and all FDC equipment is operating. Set circuit breaker to on position.

k. Set DC MAIN A BUS and B BUS circuit breakers to off (down). Verify that DC MAIN PWR ON A BUS and B BUS indicators go off and all FDC equipment is operating. Set circuit breakers to on position.

l. Set AC MAIN (J12) and DC MAIN A BUS and B BUS circuit breakers to off (down). Verify that all FDC equipment goes off except air-conditioner, radios, RCMU, CCU, and emergency lights. Verify that EMER POWER indicator of PCG is lighted. Set circuit breakers to on position.

NOTE

The surge arrester circuits protect against generator overvoltage conditions. A failure of one of the surge arrester tests indicates an overvoltage output from the generator. Have generator checked and serviced as required.

m. Set SURGE ARRESTER UNIT SELECT switch to position 1.

n. Press SURGE ARRESTER PRESS TO TEST A indicator and verify that indicator lights.

o. Press SURGE ARRESTER PRESS TO TEST B indicator and verify that indicator lights.

p. If either or both indicators fail to light, record result and continue test.

q. Repeat steps m. thru p. with SURGE ARRESTER TEST SELECT switch at positions 2 thru 8. Record results and inform DS maintenance of all test failures.

Section II. REPAIR

16-6. Introduction. This section consists of removal and replacement procedures for those items of the PCG that organizational maintenance personnel are authorized to replace. Authorized items are those with an 0 as the third character of the SMR code as shown in RPSTL of appendix D, volume 4. Removal and replacement procedures for authorized items of the PCG that are common to other major assemblies of the TACFIRE system are contained in chapter 3. Refer to chapter 3 for removal and replacement procedures for lenses, boots, lamps, and knobs.

WARNING

When cables are connected and the generator is operating, 120/208 vac is supplied at AC MAIN J12 connector. To remove power, open main circuit breaker on the generator. DEATH ON CONTACT may result if personnel fail to observe safety precautions.

16-7. Removal and Replacement of DC/DC Converter. Remove and replace the dc/dc converters in the PCG as follows.

a. *Removal.* Remove any of the dc/dc converters from the PCG as follows (fig. D-17):

(1) Energize dc emergency lights.

(2) Set DC MAIN A BUS and B BUS circuit breakers to off (down).

(3) Set AC MAIN (J12) circuit breaker to off (down).

(4) Release 12 captive bolts securing PCG front panel. Carefully lower front panel to fully open position.

(5) Remove two connectors on front of faulty dc/dc converter (45).

(6) Release four captive screws securing faulty dc/dc converter to case.

(7) If replacement is needed, remove hanger (44) from stud on case.

b. *Replacement.* To replace a dc/dc converter, perform the procedure in a. above in reverse sequence. Verify operation of the replacement dc/dc converter in accordance with the procedure in paragraph 16-5.

16-8. Removal and Replacement of Circuit Breaker Boot. The circuit breaker boot is removed and replaced according to the following procedures.

a. *Removal.* Remove the circuit breaker boot as follows (fig. D-17):

(1) Remove four screws (124) and washers (26) that secure circuit breaker boot (125) on front panel.

(2) Remove circuit breaker boot (125).

b. *Replacement.* To replace the circuit breaker boot, perform the procedure in a. above in reverse sequence.

16-9. Removal and Replacement of PCG. Remove and replace the PCG as follows.

a. *Removal.* Perform the following procedures to remove the PCG from its mounting rack.

(1) Perform standard power shutdown (refer to operator's manual). Verify that electric power plant circuit-breaker is off (down).

(2) Open shelter door and blackout curtain or obtain portable lighting equipment (e.g., lantern, flashlights).

(3) Disconnect all cables from PCG.

(4) Release four captive screws securing PCG to its mounting rack. Retract rack mounting-fasteners to their inboard positions.

WARNING

To prevent injury to personnel and damage to heavy equipment, removal and replacement of the PCG must be performed by at least two men.

(5) Remove PCG from mounting rack.

b. *Replacement.* To install the replacement PCG, perform the procedure in a. above in reverse sequence. Verify operation of the replacement PCG in accordance with the procedure in paragraph 16-5.

CHAPTER 17

COMMUNICATIONS TERMINAL BOX ORGANIZATIONAL MAINTENANCE

17-1. Introduction. There is no troubleshooting or repair of the CTB authorized at the organizational level of maintenance. Procedures for removal and replacement of the CTB are provided in the operator's manual.

CHAPTER 18

COMMUNICATIONS JUNCTION BOX ORGANIZATIONAL MAINTENANCE

18-1. Introduction. Troubleshooting or repair of the CJB is not authorized at the organizational level of maintenance. Procedures for removal and replacement of the CJB are provided in the operator's manual.

CHAPTER 19

MODULE TEST SET ORGANIZATIONAL MAINTENANCE

Section I. TROUBLESHOOTING

19-1. Introduction. Organizational maintenance personnel are authorized to repair the MTS by replacing the items coded as replaceable at the organizational level (refer to RPSTL, appendix D, volume 4). Maintenance consists of isolating a fault to a replaceable component, subassembly, or circuit card; removing and replacing the faulty item; and verifying the repair of the major assembly. In addition, certain procedures for maintaining other major assemblies of the TACFIRE system are also applicable to the MTS. These procedures, which are general in nature, are contained in chapter 3 and are referenced where applicable.

19-2. Preventive Maintenance. Preventive maintenance is performed monthly and consists of a visual check and a self test.

19-3. Troubleshooting Techniques. FI procedures are performed following detection of an MTS malfunction (refer to chapter 3). In some cases, the cause of trouble may be determined by visual inspection. In all other cases, the MTS troubleshooting procedure must be performed.

NOTE

There is no M&D FI program for the MTS.

19-4. Visual Inspection. Inspect the MTS visually for obvious faults and indications of faults as follows:

WARNING

To eliminate shock hazard when servicing the MTS, turn off power to the MTS by pressing the POWER ON switch to turn off the indicator and then setting the following PCG switches to their off position (down):

Bn FDC or DivArty FDC display group	DivArty FDC computer group
AC PRIME POWER 270 VDC (J3)	AC PRIME POWER 270 VDC (J2)
AC OR DC PRIME PWR 28 VDC (J1-J4)	AC OR DC PRIME PWR 28 VDC (J1-J4)
DC PRIME PWR 270 VDC (J3)	DC PRIME PWR 270 VDC (J2)

a. Check that all switches and mechanical parts are secure and undamaged.

b. Check MTS connectors, self-test terminal strip, test probe, test probe connectors, and test cable connectors for foreign matter. If foreign matter is present in a component, clean equipment as described in chapter 3.

19-5. MTS Self Test. The MTS self test checks the operational readiness of the MTS. Perform the following procedure; if any step fails, perform corrective maintenance.

a. Verify that all MTS connectors are secure.

b. Verify that MTS power is available.

c. Press POWER ON switch-indicator and verify that POWER ON switch-indicator lights.

d. Press and hold LAMP TEST switch. Verify that all indicators light, then release switch.

e. Press CONTINUOUS CYCLE switch-indicator and verify that CONTINUOUS CYCLE switch-indicator lights.

f. Open panel on front of MTS.

g. Connect test probe to self-test terminal strip TB101. Self test starts automatically.

h. Verify that GO indicator lights and that NO-GO and REPEAT CYCLE indicators flash.

i. When test stops, verify that SELF TEST and GO indicators are on. This indicates self test did not detect any malfunction. If SELF TEST and GO indicators are not on when test stops, perform troubleshooting procedures of paragraph 19-6.

19-6. Troubleshooting Procedures. When an MTS fails the self test, perform troubleshooting procedures as follows:

a. If any indicator fails to light when LAMP TEST switch is pressed, replace indicator lamp (refer to chapter 3) and repeat MTS self test.

b. If SELF TEST and GO indicators do not light and NO-GO indicator does light when MTS self test is performed, proceed with fault isolation procedure described in table 19-1.

c. If observed symptom is not listed in table 19-1 or if the listed corrective action does not correct the fault, refer the unit to direct support maintenance for troubleshooting and repair.

Table 19-1. Self Test Failure Analysis

Failure indication	Corrective action
POWER ON indicator does not light	Verify that MTS power is turned on at MTS. Press LAMP TEST switch. If no indicators light, press POWER ON switch, then press LAMP TEST switch. If no indicators light, replace dc/dc converter A3140.
MTS PWR SUP FAULT indicator lights	Press POWER ON switch, POWER ON indicator goes off; press POWER ON switch, POWER ON indicator lights. If MTS PWR SUP FAULT indicator lights, replace dc/dc converter A3140.
Any failure indication other than lamp test failure	Replace test probe assembly.
Failure suspected during in-circuit-card-test and self test passes	Replace test cable.

614

Section II. REPAIR

19-7. Introduction. Removal and replacement procedures for those items of the MTS (see fig. 19-1 for major assemblies) that organizational maintenance personnel are authorized to replace are provided for those items with an 0 as the third character of the SMR code as shown in the RPSTL of appendix D, volume 4. All removal and replacement procedures for authorized items of the MTS are common to other major assemblies of the TACFIRE system and are contained in chapter 3. Refer to chapter 3 for removal and replacement procedures for:

a. Extending and retracting major assembly from case assembly.

b. Removal and replacement of major assembly.

c. Removal and replacement of case assembly.

CAUTION

Observe special handling procedures in chapter 3 for circuit cards that employ MOS devices. If these types of cards are handled improperly, damage to the MOS devices may result from static charges. The MTS circuit cards that require special handling are (see fig. D-9): A3107, A3108, A3109, A3110, and A311.

d. Removal and replacement of circuit cards.

e. Removal and replacement of dc/dc converters.

f. Removal and replacement of indicator lenses and boots.

g. Removal and replacement of lamps.

h. Removal and replacement of knobs.

19-8. Repair Verification. Verify satisfactory completion of any repair by performing self test per paragraph 19-5.

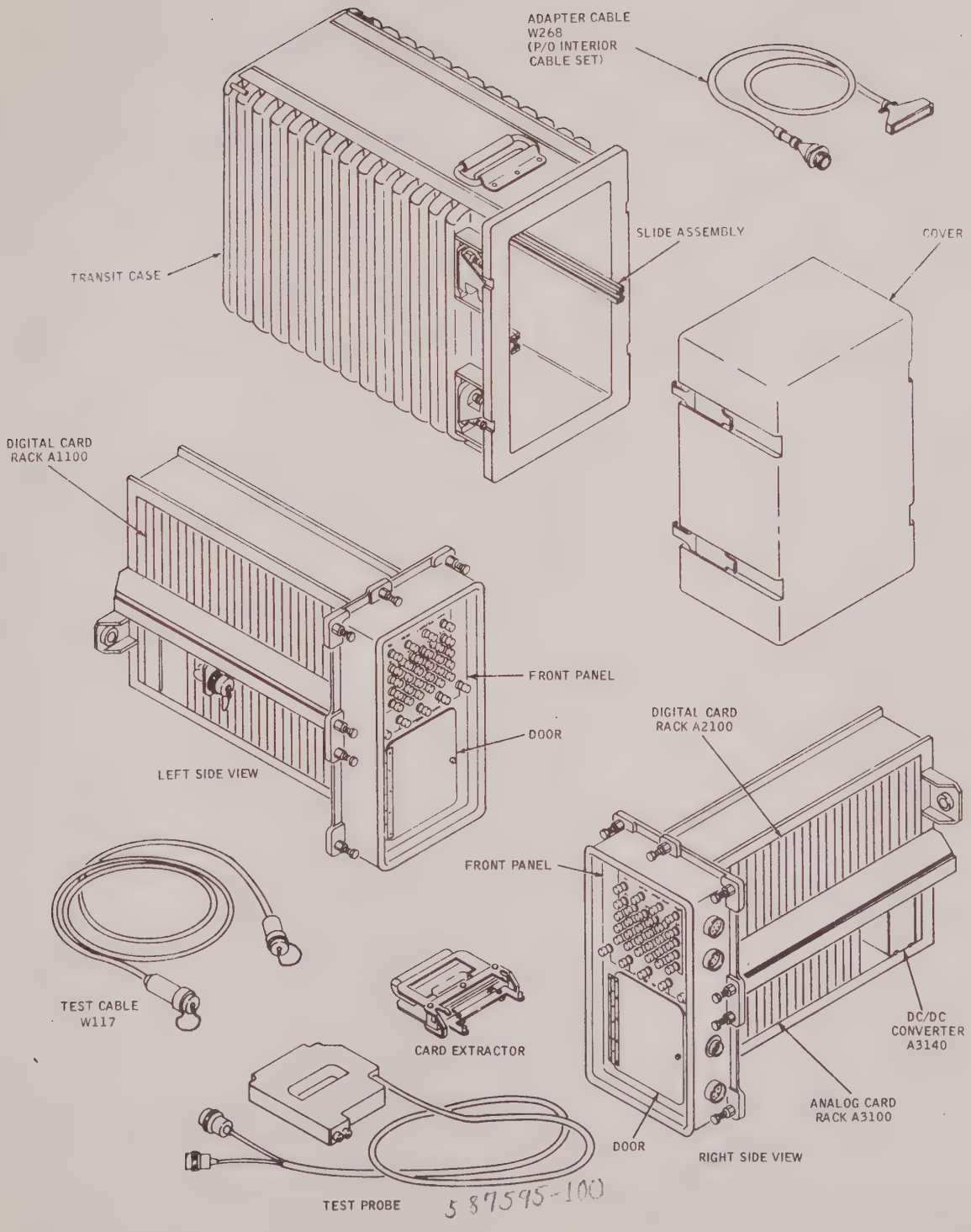

Figure 19-1. MTS Major Assemblies

CHAPTER 20

PASSIVE MAINTENANCE DEVICE GROUP ORGANIZATIONAL MAINTENANCE

20-1. Introduction. There is no troubleshooting or repair of the PMD group authorized at the organizational level of maintenance.

CHAPTER 21

MISCELLANEOUS ORGANIZATIONAL MAINTENANCE

Section I. TROUBLESHOOTING

21-1. Introduction. Miscellaneous organizational maintenance procedures are provided in this chapter for those items not covered under specific equipment chapters contained elsewhere within this volume.

21-2. Troubleshooting. No troubleshooting information is required at the organizational level of maintenance for miscellaneous equipment and components.

Section II. REPAIR

21-3. Introduction. Organizational maintenance personnel are authorized to replace those items of the DivArty computer shelter, DivArty display shelter, and Bn computer and display shelter with an O as the third character of the SMR code as shown in the RPSTL of appendix D, volume 4. The removal and replacement of major assemblies is covered in either chapter 3 of this manual or in the operator's manual. With the exception of procedures provided in the following paragraphs, removal and replacement of authorized items is obvious.

21-4. DivArty Computer Shelter Assembly Repair. Removal and replacement procedures that are not obvious for items of the DivArty computer shelter assembly are presented in the following paragraphs. See figure D-3 for DivArty computer shelter assembly component location.

WARNING

High voltages exist in the DivArty computer shelter. DEATH ON CONTACT may result if personnel fail to observe safety precautions. To eliminate shock hazard when servicing the shelter assembly, perform system shutdown by following the applicable procedure given in chapter 4, section III of the operator's manual, except ensure that the following PCG circuit breakers remain set to on (up):

AC MAIN

28 VDC LIGHTS (J10)

28 VDC LIGHTS (J10) EMER

DC MAIN

a. *Removal and Replacement of Blackout Switch.* The blackout switch is removed and replaced according to the following procedure.

(1) *Removal.* Remove blackout switch S1 (fig. D-3, 202) from the interior rear wall of the shelter assembly as follows:

(a) Set following PCG circuit breakers to off (down):

28 VDC LIGHTS (J10) EMER

28 VDC LIGHTS (J10)

(b) Disconnect cable connector W187P1 from PCG connector J10.

(c) Remove two screws (127) and two flat washers (22) that secure switch assembly (8) to shelter wall.

(d) Remove two screws (204), two flat washers (206), two lockwashers (205) and two nuts (208) that secure actuator spring (207) to switch bracket (203).

(e) Remove two screws (204), two lockwashers (205) and two flat washers (206) that secure blackout switch (202) to switch bracket (203).

(f) Disconnect two wires connected to switch terminals and tag wires.

(g) Remove blackout switch (202).

(h) Remove screw (209).

(2) *Replacement.* To replace the blackout switch S1, perform the procedure in (1) above in reverse sequence.

b. *Removal and Replacement of Telephone Set.* The telephone set is removed and replaced according to the following procedure.

(1) *Removal.* Remove the telephone set (fig. D-3, 131) from the curbside interior wall or front interior wall of the shelter assembly as follows:

(a) Disconnect telephone wires from telephone binding posts (fig. 21-1) and tag each wire lead with telephone binding post reference.

(b) Remove two flathead screws that secure telephone set in mounting bracket.

(c) If necessary, loosen wing nut on mounting bracket clamping arm and move clamping arm away from telephone.

(d) Remove telephone set from mounting bracket.

(2) *Replacement.* To replace telephone set (131), perform the procedure in (1) above in reverse sequence.

21-5. DivArty Display Shelter Assembly Repair. Removal and replacement procedures that are not obvious for items of the DivArty display shelter assembly are presented in the following paragraphs. See figure D-23 for DivArty display shelter assembly component location.

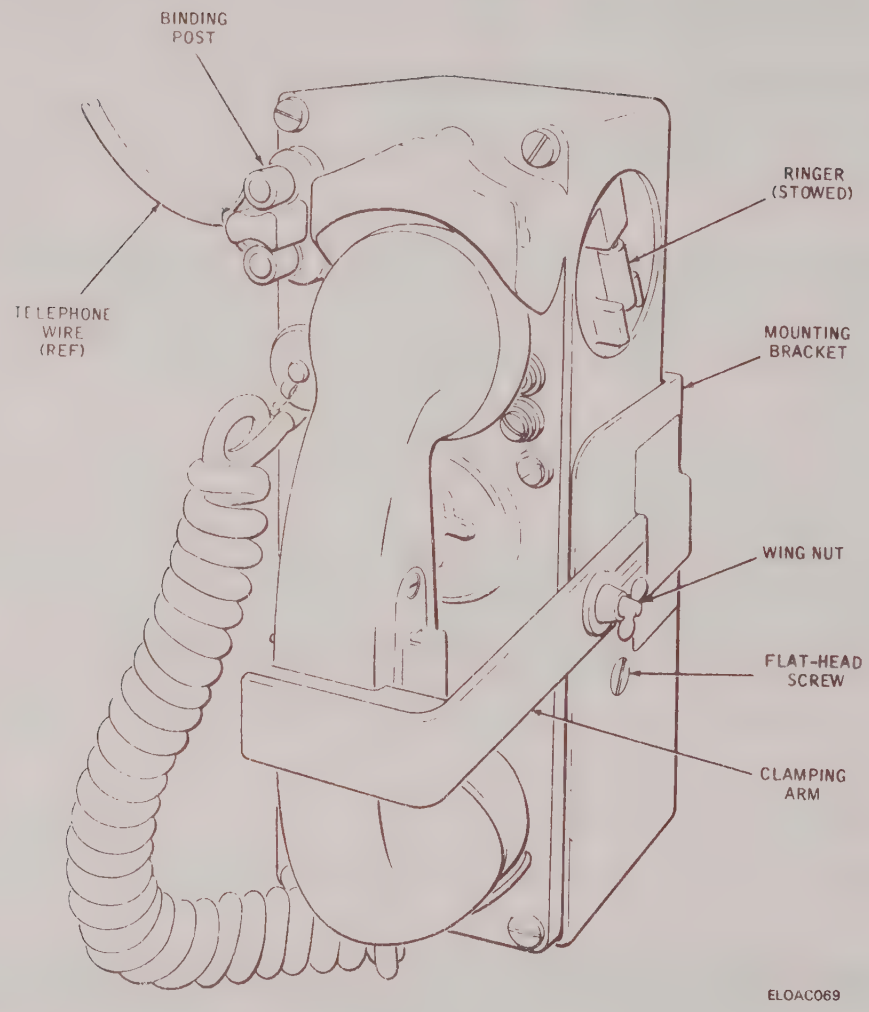

Figure 21-1. Telephone Set TA-312/PT Installed in Mounting Bracket

WARNING

High voltages exist in the DivArty display shelter. DEATH ON CONTACT may result if personnel fail to observe safety precautions. To eliminate shock hazard when servicing the shelter assembly, perform system shutdown by following the applicable procedure given in chapter 4, section III of the operator's manual, except ensure that the following PCG circuit breakers remain set to on (up):

AC MAIN

28 VDC LIGHTS (J10)

28 VDC LIGHTS (J10) EMER

DC MAIN

a. *Removal and Replacement of Blackout Switch.* The blackout switch is removed and replaced according to the following procedure.

(1) *Removal.* To remove blackout switch S1 (fig. D-23, 48) from the interior rear wall of shelter assembly, proceed as follows:

(a) Set following PCG circuit breakers to off (down):

28 VDC LIGHTS (J10) EMER

28 VDC LIGHTS (J10)

(b) Disconnect cable connector W187P1 from PCG connector J10.

(c) Remove two screws (50) and two flat washers (31) that secure switch assembly to shelter wall.

(d) Remove two screws (51), two flat washers (53), two lockwashers (52) and two nuts (55) that secure actuator spring (54) to switch bracket (49).

(e) Remove two screws (51), two lockwashers (52) and two flat washers (53) that secure blackout switch (48) to switch bracket (49).

(f) Disconnect two wires connected to switch terminals and tag wires.

(g) Remove blackout switch (48).

(h) Remove screw (56).

(2) *Replacement.* To replace blackout switch S1, perform the procedure in (1) above in reverse sequence.

b. *Removal and Replacement of Telephone Set.* The telephone set is removed and replaced according to the following procedure.

(1) *Removal.* To remove the telephone set (fig. D-23, 61) from the rear interior wall or front interior wall of the shelter assembly, proceed as follows:

(a) Disconnect telephone wires from telephone binding posts (fig. 21-1) and tag each wire lead with telephone binding post reference.

(b) Remove two flathead screws that secure telephone set in mounting bracket.

(c) If necessary, loosen wing nut on mounting bracket clamping arm and move clamping arm away from telephone.

(d) Remove telephone set from mounting bracket.

(2) *Replacement.* To replace telephone set (61), perform the procedure in (1) above in reverse sequence.

21-6. Bn Computer and Display Shelter Assembly Repair. Removal and replacement procedures that are not obvious for items of the Bn computer and display shelter assembly are presented in the following paragraphs. See figure D-42 for Bn computer and display shelter assembly component location.

WARNING

High voltages exist in the Bn computer and display shelter. DEATH ON CONTACT may result if personnel fail to observe safety precautions. To eliminate shock hazard when servicing the shelter assembly, perform system shutdown by following the applicable procedure given in chapter 4, section III of the operator's manual, except ensure that the following PCG circuit breakers remain set to on (up):

AC MAIN

28 VDC LIGHTS (J10)

28 VDC LIGHTS (J10) EMER

DC MAIN

a. *Removal and Replacement of Blackout Switch.* The blackout switch is removed and replaced according to the following procedure.

(1) *Removal.* To remove blackout switch S1 (fig. D-42, 93) from the interior rear wall of shelter assembly, proceed as follows:

(a) Set following PCG circuit breakers to off (down):

28 VDC LIGHTS (J10) EMER

28 VDC LIGHTS (J10)

(b) Disconnect cable connector W187P1 from PCG connector J10.

(c) Remove two screws (70) and two flat washers (60) that secure switch assembly (11) to shelter wall.

(d) Remove two screws (87), two flat washers (89), two lockwashers (88) and two nuts (91) that secure actuator spring (90) to switch bracket (86).

(e) Remove two screws (87), two lockwashers (88) and two flat washers (89) that secure blackout switch (93) to switch bracket (86).

(f) Disconnect two wires connected to switch terminals and tag wires.

(g) Remove blackout switch (93).

(h) Remove screw (92).

(2) *Replacement.* To replace blackout switch S1, perform the procedure in (1) above in reverse sequence.

b. *Removal and Replacement of Telephone Set.* The telephone set is removed and replaced according to the following procedure.

(1) *Removal.* To remove the telephone set (fig. D-42, 264) from the curbside interior wall or rear interior wall of the shelter assembly, proceed as follows:

(a) Disconnect telephone wires from telephone binding posts (fig. 21-1) and tag each wire lead with telephone binding post reference.

(b) Remove two flathead screws that secure telephone set in mounting bracket.

(c) If necessary, loosen wing nut on mounting bracket clamping arm and move clamping arm away from telephone.

(d) Remove telephone set from mounting bracket.

(2) *Replacement.* To replace telephone set (264), perform the procedure in (1) above in reverse sequence.

CHAPTER 22

REMOTE EQUIPMENT ORGANIZATIONAL MAINTENANCE

Section I. TROUBLESHOOTING

22-1. Introduction. Remote equipments of the TACFIRE system are the DMD, the VFMED, and the BDU. Maintenance procedures for the DMD are provided in TM 11-7440-281-14. Maintenance procedures for the VFMED and the BDU are provided in this chapter. Organizational maintenance personnel are authorized to repair the VFMED and BDU by replacement of the lighting fixture and its lamp, the cables, ELP, RDT, keyboard (VFMED only), DE (VFMED only), and the MEG or CU transit case. Maintenance consists of isolating a fault to a replaceable item; removal and replacement of the faulty item; and verification of the repair. VFMED and BDU self test and FDC-initiated remote-loop test procedures (paragraphs 22-10 and 22-12 respectively) contained in this chapter are applicable for the RDT, as troubleshooting procedures for the RDT are an integral part of the procedures for troubleshooting the VFMED or BDU. Therefore, when a fault is isolated to the RDT, instead of replacing the RDT as is done for the other authorized items of the VFMED or BDU, troubleshooting is continued to isolate the fault to a replaceable component of the RDT. When troubleshooting isolates a fault to a replaceable component, refer to chapter 7 for procedures for removal and replacement of the component, and to RPSTL figures D-45 and D-49.

22-2. DMD Description. The DMD is a self-contained, portable, battery-powered device that permits the remote operator to transmit digital messages to an FDC. Connectors are provided on the DMD for both radio and telephone communication.

22-3. VFMED Description. The VFMED is a local or remote message input, display, and printing device that enables digital messages to be received from, or transmitted to, an FDC. The digital messages are transmitted over standard field artillery wire or radio communication circuits.

22-4. BDU Description. The BDU provides the capability to receive and print digital messages from an FDC. The BDU is used at field artillery battery sites to print messages transmitted over standard field artillery wire or radio communication circuits.

22-5. Visual Inspection. Before performing remote equipment troubleshooting procedures, visually inspect the equipment for incorrect switch settings, loose or incorrect cable connections, and improperly seated circuit cards. Also inspect the equipment visually for any dirt or debris which may be the cause of intermittent equipment failures.

22-6. Operator Observed Errors. Operator observed errors are limited to detecting faults in the remote equipment and localizing the fault to a single equipment unit or assembly. Localization to a unit or assembly permits the operator to decide whether the equipment should be shut down for maintenance or operated in an alternate or degraded mode. The equipment should be observed for obvious signs of improper operation to detect equipment faults.

22-7. Troubleshooting Techniques. Remote equipments can be tested by performing self tests and operational tests, and by use of remote loop-test messages. Refer to the applicable chapter of this manual for the troubleshooting procedure for each unit. Fault isolation procedures are performed following detection of an RDT malfunction. When performing troubleshooting procedures, the RDT must be operated as part of a VFMED or BDU. There are two main types of circuit cards in the RDT; those that are testable with the MTS and those that are not. Many times, in the troubleshooting procedures of this chapter, more than one circuit card is listed as the probable cause of the fault. If multiple circuit cards are listed, first test the MTS testable circuit cards. If one of the tested circuit cards does not pass the MTS test, replace it with a known good circuit card following procedures provided in chapter 3 and then verify that the replacement cleared the fault by setting up the same conditions under which the fault was first detected. If all of the listed MTS testable circuit cards pass the MTS test, replace the first listed non-MTS testable circuit card with a known good circuit card and then check to see if the replacement cleared the fault by setting up the same conditions under which the fault was first detected. If the fault is not cleared, reinstall the circuit card just replaced, return the known good circuit card to stock, and replace the next listed non-MTS testable circuit card with a known good circuit card. Check to see if this replacement cleared the fault by setting up the same conditions under which the fault was first detected. Repeat this process until the fault is cleared. If all listed circuit cards are either tested or replaced and the fault is not cleared, contact direct support maintenance.

22-8. Troubleshooting Procedures. When a fault is suspected in the VFMED or BDU, self-test and remote-loop test procedures must be performed to isolate the fault to a specific assembly or component. Performance of the self-test procedures tests most RDT functions and RDT-to-DE (VFMED only) and RDT-to-ELP interfaces. If the remote-loop test is performed and is not satisfactorily completed, refer to table 22-1 for VFMED or BDU fault isolation to a major assembly. When performing troubleshooting procedures, the RDT must be operated as part of a VFMED or BDU. Operating the RDT in the VFMED or BDU configuration permits use of the VFMED or BDU self test and FDC-initiated remote loop test. (Refer to paragraphs 22-10 and 22-12 respectively.) Before troubleshooting the RDT, perform the following steps:

a. Position VFMED or BDU equipment as close as possible to FDC shelter door to permit use of FDC MTS to test RDT circuit cards.

b. Establish communications between FDC, and VFMED or BDU by making necessary wire connection between FDC CTB and VFMED or BDU junction box. This will permit use of FDC-initiated remote loop tests to test the FDC and VFMED or BDU interface. Refer to FDC operator's manual for proper interface connections.

Table 22-1. VFMED or BDU Fault Isolation to Major Assembly

Symptom	Probable cause	Corrective action
Remote loop test message printed by VFMED or BDU ELP but acknowledge message not printed by FDC ELP	Malfunctioning RDT	a. Perform VFMED or BDU self-test procedure to isolate fault to component or assembly. Refer to paragraph 22-10.
		b. Replace malfunctioning component or assembly. Refer to chapter 7.
		c. Replace RDT.
Remote loop test message garbled or characters omitted when printed by VFMED or BDU ELP	Malfunctioning RDT	a. Perform VFMED or BDU self test procedure to isolate fault to component or assembly.
	Malfunctioning ELP	b. Refer to chapter 13.
		c. Replace ELP.
		d. Replace malfunctioning component or assembly. Refer to chapter 7.
		e. Replace RDT.
	Malfunctioning radio	f. Replace radio.
	Malfunctioning KG-31	g. Replace KG-31.
Remote loop test message garbled or characters omitted when displayed	Malfunctioning DE (VFMED only)	a. Refer to chapter 11.
		b. Replace DE.
Unable to compose original message on keyboard	Malfunctioning keyboard (VFMED only)	a. Refer to chapter 12.
		b. Replace keyboard.
	Malfunctioning DE (VFMED only)	c. Refer to chapter 11.
No power at any VFMED or BDU units	Power source turned OFF	Ensure that main power switches and all circuit breakers on PCG are in the ON position.

626

22-9. RDT Power Faults. If the POWER/HOLD indicator is lighted, recycle power to the RDT. If th fault indicator remains lighted, perform the following steps:

a. Check INT FAULT indicator on dc/dc converter. If lighted, replace dc/dc converter (refer to chapter 7).

b. Extend RDT (refer to chapter 3).

c. Observe indicators on circuit cards A1128, A1130, and A1133 through fault indicator hole in black bay cover. If unable to observe all indicators through fault indicator hole, remove black bay cover and replace any circuit card with a lighted fault indicator following procedure provided in chapter 3.

d. For access to black bay cards, loosen 18 captive screws around perimeter of black bay cover and remove cover.

e. If no fault indicator is lighted or fault indicator on replaced circuit card (step c) is lighted, replace dc/dc converter.

f. If POWER FAULT indicator goes off, return VFMED or BDU to operator control.

g. If POWER FAULT indicator does not go off, perform self-test procedures as described in paragraph 22-10.

22-10. VFMED or BDU Self Test. The VFMED or BDU self test checks most functions within the VFMED or BDU and also provides a performance check of associated peripheral equipment. The self test can be used to isolate RDT failures to a specific group of circuit cards. The VFMED or BDU self test is initiated as follows:

a. Set keyboard AUXILIARY I/O control switch to OFF (VFMED only).

b. Set COMPOSE MODE switch to ON (VFMED only).

c. Press RDT POWER or TEST/PURGE switch to activate automatic self-test program and observe following self-test conditions (VFMED or BDU).

(1) All lamps on RDT light except:

(a) Net BUSY – blinks twice.

(b) POWER FAULT – lights (TEST/PURGE only).

(2) Audible alarm activates.

(3) Sample test message displayed on display editor (VFMED only) and printed out on ELP. Refer to figure 22-1 (VFMED only) or figure 22-2 (BDU only).

(a) Display and printout should be identical (VFMED only).

(b) Test message should consist of four lines. First line contains test pattern and all displayable characters. Second line contains fault status consisting of either a statement that all tests passed or a fault

```
◇ ∃ ⋈ ⊗  !"#$%&'()*+,-./Ø123456789:;<=>?@ABCDEFGHIJKLMNOPQRSTUVWXYZ[\]^_
FAULTS:NONE, ALL TESTS PASSED
ADDR DESTN=2        ADDR SCE=Ø          KEYTIME=1           ENCRYPT=ALL
BPS=6ØØ             BLOCK MODE=X1       MODE=HDX            NET ACCESS=1.3SEC
```

SAMPLE: FAULT FREE

```
◇ ∃ ⋈ ⊗  !"#$%&'()*+,-./Ø123456789:;<=>?@ABCDEFGHIJKLMNOPQRSTUVWXYZ[\]^_
FAULTS:6Ø,61,
ADDR DESTN=2        ADDR SCE=Ø          KEYTIME=1           ENCRYPT=SEL
BPS=12ØØ            BLOCK MODE=X2       MODE=HDX            NET ACCESS=MAN
```

SAMPLE: FAULT INDICATION

ELOAC042

Figure 22-1. Samples of VFMED Self Test and Fault Indication Test Messages

```
◇ ⅎ ⋈ ⊗  !"#$%&'()*+,-./Ø123456789:;<=>?@ABCDEFGHIJKLMNOPQRSTUVWXYZ[\]^_
FAULTS:NONE, ALL TESTS PASSED
ADDR DESTN=2        ADDR SCE=0          KEYTIME=1          ENCRYPT=ALL
BPS=6ØØ             BLOCK MODE=X1       MODE=HDX           NET ACCESS=1.3SEC
```

SAMPLE: FAULT FREE

```
◇ ⅎ ⋈ ⊗  !"#$%&'()*+,-./Ø123456789:;<=>?@ABCDEFGHIJKLMNOPQRSTUVWXYZ[\]^_
FAULTS:60,61,
ADDR DESTN=2        ADDR SCE=Ø          KEYTIME=1          ENCRYPT=SEL
BPS=12ØØ            BLOCK MODE=X2       MODE=HDX           NET ACCESS=MAN
```

SAMPLE: FAULT INDICATION

ELOAC043

Figure 22-2. Samples of BDU Self Test and Fault Indication Test Messages

number corresponding to a specific fault. For interpretation of fault numbers refer to table 22-2. Third and fourth lines contain readout of RDT front panel switch settings. In the event of a memory fault, lines three and four of test message will not appear.

22-11. Self-Test Message. The following considerations apply while using the self-test message during RDT troubleshooting:

NOTE

Before initiating self-test of the RDT NET ACCESS switch circuitry, disconnect cable W280 at connector J6 of the RDT. This action prevents undesired triggering of RDT net access delay circuits by the DDT net monitor function. After self-test of the RDT NET ACCESS circuitry is completed, restore cable connection.

a. Display/printout of an incoherent test message can be caused by a fault in ROM, RAM, CPU or I/O cards (cards A1117, A1119, and A1120, A1121 thru A1123, or A1124 respectively).

b. Examples of incoherent test messages are as follows:

(1) Fault numbers appearing on DE (VFMED only) and/or ELP are out of numerical order, or

(2) No fault numbers displayed when a system fault exists.

c. Normal fault number display on line two of test message can contain one or more fault numbers. Fault numbers should be in numerical sequence beginning with lowest number. If more than one fault number appears, clear faults in numerical sequence beginning with lowest number.

d. Fault numbers in an incomplete test message can be considered valid if fault numbers that appear are in low to high numerical sequence.

e. In the event that displayed or printed fault numbers become out of sequence during test message, disregard any numbers after out of sequence condition appears.

f. If fault numbers 70, 80, 81 are displayed (VFMED only) or printed, NET ACCESS time is not printed out or displayed (VFMED only) in test message. Each of eight automatic NET ACCESS switch increments provides an extra delay of approximately 0.40 second. Delay for actual switch position is printed out or displayed (VFMED only) in test message. Refer to table 22-3 for actual switch position delay readings.

g. Certain RDT operating malfunctions are immediately identifiable by maintenance personnel. These symptoms are listed in table 22-4.

h. Each fault number refers to a specific fault detected in RDT. Table 22-5 contains fault numbers and associated circuit card. If more than one fault number is displayed, clear faults in numerical sequence. For test results other than a test message displaying fault numbers, refer to table 22-6.

i. If any other fault condition is observed, repeat steps a. through c. as required to clear fault. If the fault does not clear, contact direct support maintenance activity.

Table 22-2. Interpretation of Fault Numbers

Fault number	Location of fault
10 thru 17	ROMS
20 thru 27	ROMS
30 thru 37	RAMS
40 thru 47	RAMS
50	ELP, ELP Interface
60, 61 (VFMED only)[1]	DE, DE Interface
70	COMSEC Interface
80, 81	MODEM

[1]These numbers can appear in BDU due to DE (VFMED only) interface card malfunction.

627

22-12. FDC-Initiated Remote Loop Test. Upon request, the responsible FDC operator will originate and transmit to the VFMED or BDU a remote loop test message. The text of this test message is shown in figure 22-3. The received message will be printed on the ELP and be identical to the transmitted message.

Table 22-3. NET ACCESS Switch Actual Position Delay Readings

Switch position	Switch readings seconds Min.	Max.
1	0.9	1.3
2	1.3	1.7
3	1.8	2.2
4	2.2	2.6
5	2.6	3.0
6	3.0	3.4
7	3.4	3.8
8	3.7	4.1

628

Table 22-4. RDT Operating Malfunctions

Fault symptom	Probable cause	Corrective action[1]
No manual acknowledge message when MAN ACK switch is pressed	Logic circuit card	MTS test circuit card A2105, A2108, A2116, A2117 or A2118.
	Faulty switch	Refer to chapter 46.
Alarm remains on when ALARM SILENCE switch is pressed.	Logic circuit card	MTS test circuit card A2105, A2108, A2116, A2117 or A2118.
		Replace circuit card A1123.
	Faulty switch	Refer to chapter 46.
No retransmission of message when RE-XMIT switch is pressed	Logic circuit card	MTS test circuit card A2106, A2108, A2116, A2117 or A2118.
	Faulty switch	Refer to chapter 46.
No alarm or alarm volume during ALARM or ALARM Vol initiating event	Red/black isolation circuit card	Replace circuit card A1128.
	Logic circuit card	MTS test circuit cards A2105, A2106, A2108 or A2116.
	Faulty potentiometer	Refer to chapter 46.
Inoperative or intermittent BRT control	Series regulator circuit card	Replace circuit card A1130.
	Faulty potentiometer	Refer to chapter 46.
Inoperative or intermittent headset or HDST Vol control	Headset	Replace headset.
	MODEM circuit card	Replace circuit card A1132.
	Faulty potentiometer	Refer to chapter 46.
RDT switch settings different from readouts displayed on DE or ELP	Logic circuit card	MTS test circuit card A2104, A2105, A2106, A2107, A2131, A2134, A2136 or A2138.
No transmission output when using MODE, BPS or BLOCK MODE switches	Red/black isolation circuit card	Replace circuit card A1128 or A1133.
Inoperative NET ACCESS switch	Red/black isolation circuit card	Replace circuit card A1128, A1131 or A1133.
	DDT control circuit card	Replace circuit card A1132.
Front panel indicators do not light; fault number 70 displayed on printout	Circuit card A2128 missing	Install circuit card A2128 or ensure circuit card seated.

[1]MTS test circuit cards are listed in numerical sequence listed. Replace cards one at a time and perform self test after each replacement until fault condition is corrected.

629

Table 22-5. Self-Test Fault Numbers

Fault number	Repair action[1]
10	Replace circuit card A1117
11	
12	
13	
14	
15	
16	
17	
20	Replace circuit card A1119
21	
22	
23	
24	
25	
26	
27	
30	Replace circuit card A1121
31	
32	
33	
34	
35	
36	
37	
40	Replace circuit card A1120
41	
42	
43	
44	
45	
46	
47	
50	MTS test circuit card A2101, A2102, A2103, A2105, A2106, A2107, A2108, A2134, or A2136.
	Replace circuit card A1124 or A2109.
60, 61	MTS test circuit card A2101, A2102, A2103, A2104, A2105, A2108, A2119, A2134 or A2136.
	Replace circuit card A1124, A2109, A2111 or A2112.
70	MTS test circuit card A2107, A2116, A2117, A2118, A2119, A2120, A2121, A2122, A2123, A2124, A2128, A2131, A2132, A2134, A2135, A2136, A2137, A2138, A2139, A2140, A2141, A2142, A2143, A2147 or A2149.
	Replace circuit card A1124, A1133, A2114 or A2115.
	Verify circuit card A2128 installed and seated.
80-81	MTS test circuit card A2108, A2116, A2119, A2132, A2134, A2136, A2139, A2143, A2145, A2146, A2147, A2148, A2149, A2150, A2151 or A2152.
	Replace circuit card A1124, A1128, A1131, A1132, or A1133.

[1]MTS test circuit cards are listed in numerical sequence. Replace cards one at a time and perform self test after each replacement until fault condition is corrected.

A630

Table 22-6. Self-Test Fault Conditions

Fault symptom	Probable cause	Corrective action[1]
Unable to initiate self test at turn on	Multiple circuit cards	Perform MTS test for all digital circuit cards Replace circuit card A2130. Replace circuit card A1117, A1119, A1120, A1123 or A1124.
		Refer to chapter 46.
No data transfer between RDT and ELP or DE TEST/PURGE indicator remains on more than 15 seconds	CPU system fault	MTS test circuit card A2106, A2108, A2118, A2119, A2132, A2136, A2137, A2138, A2139, A2140, A2141, A2142 or A2143.
		Replace circuit card A1117, A1119, A1123, A1124 or A2130.
No test message, blinking TEST/PURGE indicator	CPU I/O fault card	MTS test circuit card A2103, A2106, A2131, A2134, A2136 or A2138.
		Replace circuit card A1117, A1119, A1120, A1121, A1123, A1124 or A2112.
Partial test message, blinking TEST/PURGE indicator	Multiple circuit cards	Perform MTS test for faulty circuit card as indicated in self test fault table.
		Replace faulty circuit cards.
Not all applicable indicators are ON during functional test	Faulty lamp incandescent	Replace faulty lamp.
	Logic circuit card	MTS test circuit card A2105, A2106, A2107, A2108, A2116 or A2117.
Test message displayed on DE contains more than one parity error character or is garbled and no DE faults are detected on RDT	DE faulty (VFMED only)	Refer to chapter 11.
Test message printed on ELP contains more than one parity error character or is garbled and no ELP faults are detected by the RDT	ELP faulty	Refer to chapter 13.
DE and ELP displayed switch position readouts differ from RDT	Logic circuit card	MTS test circuit card A2104, A2105, A2106, A2107, A2134 or A2136.
		Replace circuit card A1124.
DE and ELP displayed switch position error readouts occur on MODE, BPS or BLOCK MODE switches of RDT	Red/black isolation circuit card	Replace circuit card A1128 or A1133.
DE and ELP displayed switch position error readouts occur on NET ACCESS switch of RDT	Red/black isolation circuit card	Replace circuit card A1128 or A1133.
	DDT control circuit card	Replace circuit card A1131 or A1132.

See footnote at end of table.

631-1

Table 22-6. Self-Test Fault Conditions - Continued

Fault symptom	Problem cause	Corrective action [1]
No RDT test initiate when TEST/PURGE switch is pressed	Logic circuit card	Replace MTS test circuit card A2106, A2108, A2116, A2117, A2118 or A2132. Replace circuit card A1124.

[1]MTS test circuit cards are listed in numerical sequence. Replace cards one at a time and perform self test after each replacement until fault condition is corrected.

631-2

MD;XMT2;TEST: Ø123456789Ǝ

VFMED REMOTE LOOP TEST MESSAGE

MD;XMT3;TEST: Ø123456789Ǝ

BDU REMOTE LOOP TEST MESSAGE

ELOAC044

Figure 22-3. Text of VFMED/BDU Remote Loop Test Messages

If the received message is without non-correctable parity errors, an auto-acknowledge message is transmitted back to the FDC. However, if the received message has non-correctable parity errors, no auto-acknowledge message is transmitted. In this case, the FDC will retransmit the message up to three retries. If after four attempts the FDC does not receive an auto-acknowledge, the FDC operator and the VFMED or BDU operator should communicate by voice to resolve the apparent failure.

a. *VFMED Operator Actions.* Upon receipt of the test message, the VFMED operator should check the message for correctness. If the message is correct, the VFMED operator should change the destination and source characters in the communication line and retransmit the test message back to the FDC. The received message at the FDC should be identical to the message transmitted by the VFMED. If the message is not identical, the FDC operator should contact the VFMED operator and notify him of the apparent failure.

b. *VFMED Tests.* The VFMED can initiate a remote loop test message and a fault indication test message. The text of these messages is shown in figure 22-4. The VFMED operator transmits the test messages to the FDC where the computer checks for correctness. If the correct message is received, a pass message will be printed at the FDC and the test message is transmitted back to the VFMED. If not, a fail message is printed. There is no pass-fail message transmitted to the VFMED. If the test fails, the VFMED operator is contacted by voice.

c. *Initiation of VFMED Tests.* The remote loop test message and the fault indication test message are composed and transmitted in the same manner as any other type of message. The comm-line is typed with the FDC as the destination. After the comm-line, the text is typed and the operator then transmits the test message and waits for an auto-acknowledge signal. If no acknowledge is received after 30 seconds, the message should be retransmitted. After the third retransmission, the FDC should be notified by voice that there is an apparent failure in the communication link. If the test message was received by the FDC with no uncorrected parity errors, the message will be automatically transmitted back to the VFMED. The VFMED operator should check the received message. If errors are present, advise the FDC operator by voice channel.

d. *BDU Operator Actions.* Upon receipt of a test message, the BDU operator should check it for correctness. If the message is not correct, the BDU operator should contact the FDC operator by voice and notify him of an apparent failure. If the test message is correct, the system is assumed to be operational.

```
MD;RCV2;TEST: Ø123456789⅃
```

A) REMOTE LOOP TEST

```
MD;FLT2;TEST: ABCDEFGHIJKLMNOPQRSTUVWXYZ ]'!-/[>(<),:;.@#$%+_&*="^\?⋈
Ø123456789 AAAAAAAAAAAAAAAAAAAAAAAAAAAAAAAAAAAAAAAAAAAAAAAAAĀAAAAAAAAAA⅃
```

B) FAULT INDICATION TEST

ELOAC045

Figure 22-4. VFMED Test Messages

Section II. REPAIR

22-13. Introduction. When any remote equipment assembly is found to be malfunctioning, refer to the respective equipment chapter for specific maintenance instructions and removal and replacement procedures. When organizational maintenance procedures fail to correct a malfunction, contact direct support maintenance activity.

22-14. Removal and Replacement of MEG. The MEG is removed and replaced according to the following procedures.

a. *Removal.* Remove the MEG as follows:

(1) Set keyboard POWER switch to OFF.

(2) Set power distribution box MAIN POWER switch to OFF.

(3) Remove MEG by following, in reverse sequence, installation procedures in TM 11-7440-253-10. When installing keyboard and hood in transit case cover, refer to figure 22-5.

b. *Replacement.* To replace the MEG, perform the installation procedures in TM 11-7440-253-10.

22-15. Removal and Replacement of DE. The DE is removed and replaced according to the following procedures.

a. *Removal.* Remove the DE as follows:

(1) Set keyboard POWER switch to OFF.

(2) Set power distribution box MAIN POWER switch to OFF.

(3) Remove keyboard from DE following procedures provided in chapter 12.

(4) Remove DE following procedures provided in chapter 3.

b. *Replacement.* Replace the DE as follows:

(1) Install DE following procedures provided in chapter 3.

(2) Install keyboard following procedures provided in chapter 12.

22-16. Removal and Replacement of RDT. The RDT is removed and replaced according to the following procedures.

a. *Removal.* Remove the RDT as follows:

(1) If removing RDT from VFMED, set keyboard POWER switch to OFF.

(2) Press RDT POWER switch to turn off POWER indicator.

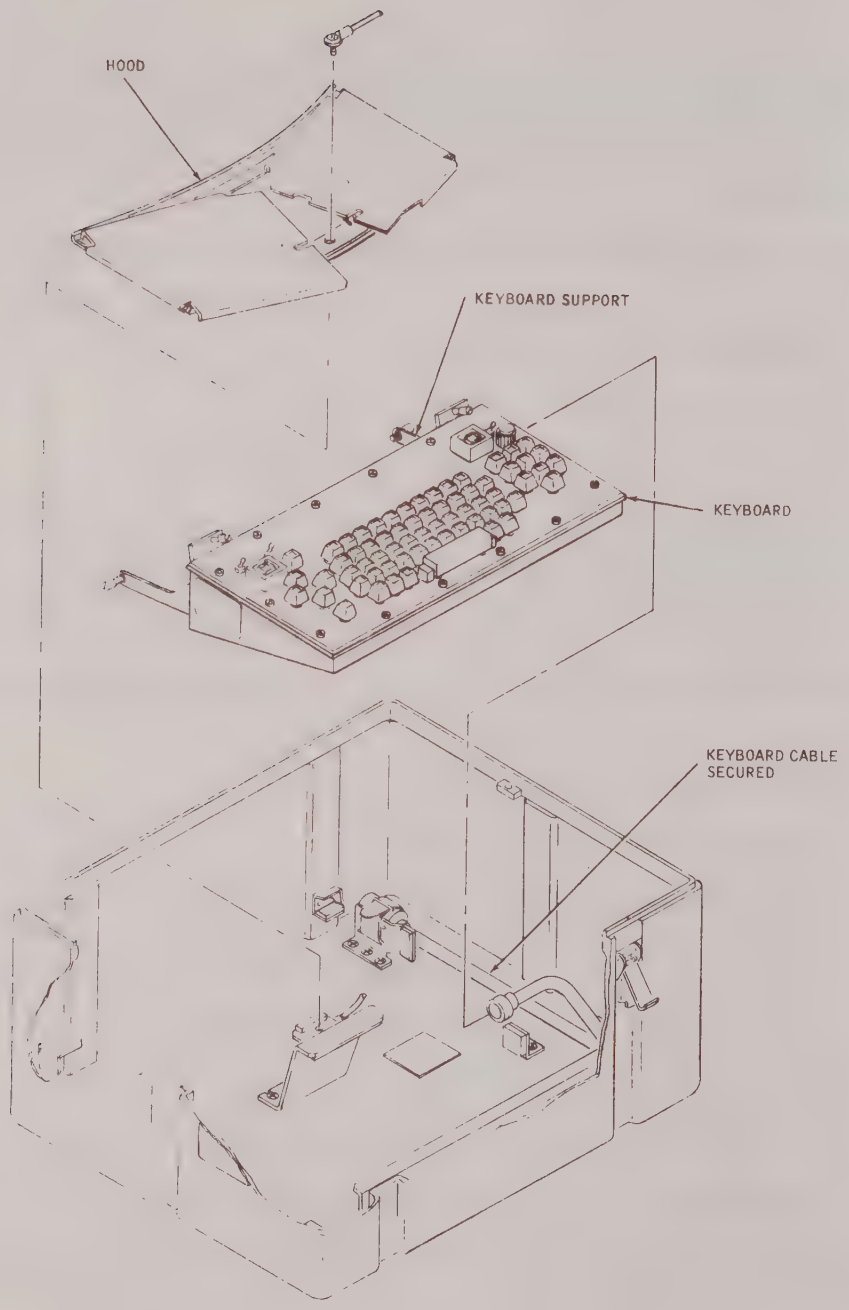

Figure 22-5. MEG Cover Storage

(3) Set power distribution box MAIN POWER switch to OFF.

(4) Remove RDT following procedures provided in chapter 3.

b. *Replacement.* Replace the RDT following procedures provided in chapter 3.

22-17. Removal and Replacement of Keyboard. The keyboard is removed and replaced according to the following procedures.

a. *Removal.* Remove the keyboard as follows:

(1) Set keyboard POWER switch to OFF.

(2) Set power distribution box MAIN POWER switch to OFF.

(3) Remove keyboard following procedures provided in chapter 12.

b. *Replacement.* Replace the keyboard following procedures provided in chapter 12.

22-18. Removal and Replacement of ELP. The ELP is removed and replaced according to the following procedures.

a. *Removal.* Remove the ELP as follows:

(1) Press ELP POWER switch to turn off POWER indicator.

(2) Set power distribution box MAIN POWER switch to OFF.

(3) Remove ELP by following, in reverse sequence, installation procedures in the operator's manual.

b. *Replacement.* To replace the ELP, perform the installation procedures in the operator's manual.

22-19. Removal and Replacement of CU. The CU is removed and replaced according to the following procedures.

a. *Removal.* Remove the CU as follows:

(1) Press RDT POWER switch to turn off POWER indicator.

(2) Set power distribution box MAIN POWER switch to OFF.

(3) Remove CU by following, in reverse sequence, installation procedures in TM 11-7440-251-10.

22-20. Removal and Replacement of Case. The case is removed and replaced according to the following procedures.

a. *Removal.* Remove the case as follows:

(1) Remove, as applicable, DE, RDT, and keyboard following procedures of paragraphs 22-15, 22-16, and 22-17 respectively.

(2) Remove case from universal mount following procedures provided in chapter 3.

b. *Replacement.* Replace the case as follows:

(1) Replace case in universal mount following procedures provided in chapter 3.

(2) Install, as applicable, DE, RDT, and keyboard following procedures of paragraphs 22-15, 22-16, and 22-17 respectively.

22-21. Removal and Replacement of Cable Set. The cable set is removed and replaced according to the following procedures.

a. *Removal.* Remove the cable set as follows:

(1) Set power distribution box MAIN POWER switch to OFF.

(2) Remove cable set by following, in reverse sequence, installation procedures provided in the operator's manual.

b. *Replacement.* To replace the cable set, perform the installation procedures provided in the operator's manual.

22-22. Repair Verification. To verify repair of the remote equipment, perform the self test and remote loop test described in Section I of this chapter. If the self test and remote loop test are successfully completed, return remote equipment to operator control.

APPENDIX A

REFERENCES

KAO-137B/TSEC	Operating Instructions for TSEC/KG-30/36 Series of Equipments
KAM-237A/TSEC, Volume I	Maintenance Manual TSEC/KG-30/30A/33/33A/34/34A Description, Installation and Principles of Operation
KAM-238A/TSEC, Volume II	Maintenance Manual TSEC/KG-30/30A Maintenance Procedures and Diagrams
KAM-240B/TSEC, Volume I	Maintenance Manual TSEC/KG-31/31A/35/35A/36/36A Description, Installation and Principles of Operation
DTM 5-4120-243-14	Air Conditioner, Organizational, DS, GS and Depot Maintenance Manual
TM 11-5805-201-12	Telephone Set TA-312/PT Organizational Maintenance Manual
TM 11-5820-401-10, TM 11-5820-401-20, TM 11-5820-401-30	Radio Set AN/VRC-46
TM 11-7440-240-10	Operator's Manual: Fire Direction Center, Artillery, Processing and Display OA-8389/GSG-10(V) (Battalion)
TM 11-7440-241-10	Operator's Manual: Fire Direction Center, Artillery, OA-8390/GSG-10(V) (Division)
TM 11-7440-251-10	Operator's Manual: Data Display Artillery, Battery AN/GSQ-122 (BDU)
DTM 11-7440-252-35	Display Editor, DS, GS and Depot Maintenance Manual
TM 11-7440-253-10	Operator's Manual: Message Entry Device, Variable Format AN/GSC-21 (VFMED)
PDEPTM 11-7440-281-14	Message Device, Digital AN/PSG-2 ( ), Organizational, DS, GS and Depot Maintenance Manual

APPENDIX B

MAINTENANCE ALLOCATION CHART

Section I. MAINTENANCE OPERATIONS

B-1. Introduction. This appendix provides a summary of the maintenance operations covered in the equipment manuals for Fire Direction Center, Artillery AN/GSG-10(V). It authorizes categories of maintenance for specific functions on repairable items and components and the tools and equipment required to perform each function. This appendix can be used as an aid in planning maintenance operations.

B-2. Maintenance Functions. Maintenance functions are defined in the following paragraphs.

a. *Inspect.* Determine serviceability of an item by visual comparison of its physical, mechanical, and electrical characteristics with established standards.

b. *Test.* Verify serviceability and detect early electrical or mechanical failure by use of special equipment such as gages, meters, etc. This is accomplished with external test equipment and does not include operation of the equipment and operator type tests that use internal meters or indicating devices.

c. *Service.* Clean; preserve; charge; and add fuel, lubricants, cooling agents, and air as required. If painting or lubricating is to be defined separately, they can be listed.

d. *Adjust.* Change so as to fit, conform or make suitable to the extent necessary to bring into acceptable operating range.

e. *Align.* Adjust two or more components or assemblies of an electrical or mechanical system so that their functions are properly synchronized. This does not include setting of the frequency control knobs of radio receivers or transmitters to the desired frequency.

f. *Calibrate.* Determine the adjustments or repairs to be made in instruments or test equipment used in precise measurement. This requires the comparison of two instruments: i.e., a certified standard of known accuracy to detect any discrepancy in the accuracy of the instrument being calibrated.

g. *Install.* Set up for use in an operational environment such as an encampment, a site, or a vehicle.

h. *Replace.* Replace unserviceable items with serviceable ones.

i. *Repair.* Restore an item to serviceable condition through correction of a specific failure or unserviceable condition. This function includes, but is not limited to, welding, grinding riveting, straightening, and replacement of parts other than the trial and error replacement of running spare type items such as fuses, lamps, or circuit cards.

j. *Overhaul.* Often, this involves the highest degree of maintenance performed by the Army, in order to minimize work time in process, and be consistent with quality and economy of operation. It means restoration of an item to a completely serviceable condition as prescribed by maintenance standards in the technical publications for each item of equipment. Overhaul does not return an item to a like-new, zero-mileage, or zero-hour condition.

k. *Rebuild.* The highest degree of maintenance, it consists of restoring equipment as nearly as possible to new condition in accordance with original manufacturing standards. Rebuild is performed only when required by operational considerations or other paramount factors and then only at the depot maintenance level. Rebuild reduces to zero the hours or miles the equipment, or component, has been in use.

B-3. Explanation of Format. The format of maintenance allocation chart tables B-1 thru B-4 is explained in the following paragraphs.

a. *Column 1, Group Number.* This column lists the group numbers that identify components, assemblies, subassemblies, and modules with the next higher assembly.

b. *Column 2, Component/Assembly.* This column lists the names of components, assemblies, subassemblies, and modules on which maintenance is authorized.

c. *Column 3, Maintenance Function.* This column lists the maintenance functions, defined in paragraph B-2, authorized for each component and assembly.

d. *Column 4, Maintenance Category.* This column lists the category at which performance of the specific maintenance function is authorized. Authorization to perform a maintenance function at any category also includes authorization to perform that maintenance function at higher categories. The codes represent the maintenance categories as follows:

Code	Maintenance Category
C	Operator/Crew
O	Organizational maintenance
F	DS maintenance
H	GS maintenance
D	Depot Maintenance

e. *Column 5, Tools and Equipment.* This column specifies, by code, those tools and test equipment required to perform the designated function. The codes refer to specific tools and test equipment identified in table B-5.

B-4. Explanation of Format of Table B-5, Tool and Test Equipment Requirements. The columns in table B-5, Tool and Test Equipment Requirements, are explained in the following paragraphs.

a. *Tool or Test Equipment Ref Code.* The numbers in this column coincide with the numbers used in the tools and equipment column of the Maintenance Allocation Chart to indicate applicable tool to be used for that maintenance function.

b. *Maintenance Category.* The codes in this column indicate the maintenance category usually allocated to the facility.

c. *Nomenclature.* This column lists the tools and test equipment required for maintenance.

d. *National/NATO Stock Number.* This column lists the national stock number of the specific tool or test equipment.

e. *Tool Number.* This is the manufacturer's part number.

Table B-1. Maintenance Allocation Chart for Fire Direction Center, Artillery OA-8390/GSG-10(V)

(1) Group number	(2) Component assembly	(3) Maintenance function	(4) Maintenance category C	O	F	H	D	(5) Tools and equipment
00	Fire Direction Center, Artillery OA-8390/GSG-10(V) 586452	Inspect	0.1					
		Test		0.3				8
		Service		0.1				3
		Repair		0.5				1, 2, 3, 5
		Test					2.0	23
01	Interconnection Kits Arty MK-1131/GSG-10 and MK-1786/GSG-10 591035/591036	Inspect	0.1					
		Install	1.0					
		Replace		0.2				1, 5
		Repair					1.0	6, 7
		Test					0.5	9
02	Fire Direction Center, Arty, Proc OL-48/GSG-10 586328	Install	1.0					
		Test	0.1					
		Repair		0.5				1, 3, 5
0201	Shelter, Elec Equipment S-490/GSG-10 586346	Inspect	0.1					
		Repair[1]		0.5				5
0202	Air Conditioner/Heater (see TM 5-4120-243-14)							
0203	Telephone Set TA-312/PT (see TM 11-5805-201-12)							
0204	Radio Set AN/VRC-46 (see TM 11-5820-401-12)							

See footnotes at end of table.

Table B-1. Maintenance Allocation Chart for Fire Direction Center, Artillery OA-8390/GSG-10(V) – Continued

(1) Group number	(2) Component assembly	(3) Maintenance function	(4) Maintenance category C	O	F	H	D	(5) Tools and equipment
0205	Electronic Tactical Key Generator KG-30 (see TM KAM-237( )/TSEC)							
0206	Panel Assy, Power 586357	Replace			0.4			6
		Repair			1.5			6
0207	Junction Box 588583	Replace			0.4			6
		Repair			1.0			6
0208	Terminal Box 590149	Replace			0.4			6
		Repair			1.0			6
0209	Interconnection Kit, Arty Proc MK-1190/GSG-10 591031	Install	1.0					
		Replace		0.2				1
		Repair					1.0	6, 7
0210	Headset H-144/U (see TM 11-5965-206-15P)							
0211	Terminal Box J-3320/GSG-10 586442-100	Install	0.1					
		Replace		0.1				1
		Repair			1.0			6
0212	Test Set, Module AN/GSM-208 586112	Inspect	0.1					
		Test		0.1				8
		Replace		0.1				1
		Repair		0.5				3, 5
		Overhaul					80.0	6, 7, 13, 17-22

615-2

See footnotes at end of table.

Table B-1. Maintenance Allocation Chart for Fire Direction Center, Artillery OA-8390/GSG-10(V) – Continued

(1) Group number	(2) Component assembly	(3) Maintenance function	(4) Maintenance category C	O	F	H	D	(5) Tools and equipment
021201	Case Assy 587403	Replace		0.1				1
		Repair			1.0			5, 7
021202	Probe Assy 587595	Replace		0.1				
		Repair			0.2			4
021203	Cable Assy 591267	Replace					20.0	4
		Repair					1.0	6, 7
021204	Circuit Cards, Plug-in	Inspect			0.1			
		Test			0.1			8
		Replace			0.1			1, 3
		Test				0.2 L		13
		Repair[2]				1.0 L		6, 7, 17-22
021205	Power Supply 126650	Replace		0.1				3
		Test				0.2 L		13
		Repair[2]				1.0 L		6, 7, 17-22
021206	Panel Assy, Front 588697	Replace					2.0	6, 7
		Repair[3]		0.1				3
		Repair			1.0			4
021207	Card Racks 587621/587622	Replace					2.0	6, 7
		Repair					1.5	6, 7

See footnotes at end of table.

Table B-1. Maintenance Allocation Chart for Fire Direction Center, Artillery OA-8390/GSG-10(V) – Continued

(1) Group number	(2) Component assembly	(3) Maintenance function	(4) Maintenance category C	O	F	H	D	(5) Tools and equipment
0213	Computer, Digital AN/GYK-12(V)1 586017-103	Inspect	0.1					
		Test	0.3					
		Service	0.1					
		Replace		0.6				1
		Repair		0.5				1, 3
021301	Central Processing Unit MX-8950/GYK 586018	Test			1.0			14, 15, 16
		Replace		0.2				1
		Repair		0.5				3, 5
		Overhaul					120.0	6, 7, 13, 17-22
02130101	Case Assy 587400	Replace		0.6				1
		Repair			1.0			4, 7
02130102	Circuit Cards, Plug-in	Inspect		0.1				
		Test		1.0				8
		Replace		0.1				3
		Test				0.2 L		13
		Repair[2]				1.0 L		6, 7, 17-22
02130103	Panel Assy, Front 586251	Replace					2.0	6, 7
		Repair[3]		0.1				3
		Repair			1.0			4
02120104	Card Cage Assys 586543/586544	Inspect		0.3				
		Replace					2.0	6, 7
		Repair					1.5	6, 7

See footnotes at end of table.

615-4

Table B-1. Maintenance Allocation Chart for Fire Direction Center, Artillery OA-8390/GSG-10(V) - Continued

(1) Group number	(2) Component assembly	(3) Maintenance function	(4) Maintenance category C	O	F	H	D	(5) Tools and equipment
02130105	Frame Assy 586253	Inspect		0.1				
		Replace					1.5	6, 7
		Repair					1.5	6, 7
021302	Input/Output Unit MX-8951/GYK 586098	Replace		0.2				1
		Repair		0.5				3, 5
		Overhaul					120.0	6, 7, 13, 17-22
		Test			1.0			14, 15, 16
02130201	Case Assy 587400	Replace		0.2				1
		Repair			1.0			4, 7
02130202	Circuit Cards, Plug-in	Inspect		0.1				
		Test		0.1				8
		Replace		0.1				3
		Test				0.2 L		13
		Repair[2]				1.0 L		6, 7, 17-22
02130203	Power Supply 126649	Replace		0.1				3
		Test				0.2 L		13
		Repair[2]				1.0 L		6, 7, 17-22
02130204	Card Rack Assys 586584/586585	Inspect		0.1				
		Replace					2.0	6, 7
		Repair					1.5	6, 7
02130205	Panel Assy, Front 588389	Replace					2.0	6, 7
		Repair[3]		0.1				3
		Repair			1.0			4

See footnotes at end of table.

Table B-1. Maintenance Allocation Chart for Fire Direction Center, Artillery OA-8390/GSG-10(V) – Continued

(1) Group number	(2) Component assembly	(3) Maintenance function	(4) Maintenance category C	O	F	H	D	(5) Tools and equipment
02130206	Frame Assy 588387	Inspect		0.1				
		Replace					1.5	6, 7
		Repair					1.5	6, 7
021303	Memory Unit, Mass Core MU-619/GYK 586320	Test			1.0			14, 15, 16
		Replace		0.2				1
		Repair		0.5				3, 5
		Overhaul					80.0	6, 7, 13, 17-22
02130301	Power Supply 544614	Replace		0.1				3
		Repair					1.0	6, 7, 13, 17-22
		Test					0.2	13
02130302	Core Stack Assy 865230	Replace			1.0			4, 6
		Repair					1.5	6, 7
02130303	Circuit Cards, Plug-in	Inspect		0.1				
		Test		0.1				8
		Replace		0.1				3
		Test				0.2 L		13
		Repair[2]				1.0 L		6, 7, 17-22
02130304	Card Cage Assy 590491	Replace					2.0	6, 7
		Repair					1.5	6, 7

See footnotes at end of table.

615-6

Table B-1. Maintenance Allocation Chart for Fire Direction Center, Artillery OA-8390/GSG-10(V) – Continued

(1) Group number	(2) Component assembly	(3) Maintenance function	(4) Maintenance category C	O	F	H	D	(5) Tools and equipment
02130305	Front Panel Assy 544616	Inspect	0.1					
		Replace					2.0	6, 7
		Repair[3]		0.1				3
		Repair			1.0			4
02130306	Frame Assy 544618	Inspect		0.1				
		Replace					1.5	6, 7
		Repair					1.5	6, 7
02130307	Case Assy 587400	Inspect		0.1				
		Replace		0.1				1
		Repair			1.0			4, 7
0214	Control, Tape Transport Cartridge C-8756(V)2/GYK 586022-100, or Control, Magnetic Tape Unit C-10679(V)2/GYK12(V) 586022-102	Inspect	0.1					
		Test	0.1					
		Replace		0.1				1
		Repair		0.5				3
		Overhaul					60.0	6, 7, 13, 17-22
021401	Case Assy 587400	Inspect		0.1				
		Replace		0.1				1
		Repair			1.0			4, 7
021402	ARMM 586121	Test	0.1					
		Replace		0.1				1
		Repair		0.5				3

See footnotes at end of table.

Table B-1. Maintenance Allocation Chart for Fire Direction Center, Artillery OA-8390/GSG-10(V) – Continued

(1) Group number	(2) Component assembly	(3) Maintenance function	(4) Maintenance category C	O	F	H	D	(5) Tools and equipment
02140201	Circuit Cards, Plug-in	Inspect		0.1				
		Test		0.1				8
		Replace		0.1				3
		Test				0.2 L		13
		Repair[2]				1.0 L		6, 7, 17-22
02140202	Converter DC/DC 126657	Replace		0.1				3
		Repair					1.0	6, 7, 13, 17-22
		Test				0.2 L		13
02140203	Panel Assy 588437	Inspect		0.1				
		Replace					1.5	6, 7
		Repair			1.5			6, 7
021403	Magnetic Tape Unit 591892	Test	0.1					
		Replace		0.1				1
		Repair		0.5				3
02140301	Circuit Cards, Plug-in	Inspect		0.1				
		Test		0.1				8
		Replace		0.1				3
		Test				0.2 L		13
		Repair[2]				1.0 L		6, 7, 17-22
02140302	Converter, DC/DC 126677	Replace		0.1				3
		Repair					1.0	6, 7, 13, 17-22
		Test				0.2 L		13
02140303	Magnetic Tape Transport 10285211	Replace			0.1			6, 7
		Repair			0.5			6, 7, 9
		Test					0.5	

See footnotes at end of table.

615-8-1

Table B-1. Maintenance Allocation Chart for Fire Direction Center, Artillery OA-8390/GSG-10(V) – Continued

(1) Group number	(2) Component assembly	(3) Maintenance function	(4) Maintenance category C	O	F	H	D	(5) Tools and equipment
02140304	Magnetic Tape Cartridge 494-9001	Replace		0.1				
		Repair			0.5			6, 7
0215	Tape Transport Cartridge MX-8952/GYK 586139	Replace		0.1				
		Service[4]					1.5	6, 7
		Repair						
0216	Converter Group, Power OU-41/GSG-10 586023-105	Inspect	0.1					
		Test	0.1					
		Service	0.1					
		Replace		0.2				1
		Repair		0.5				3
		Overhaul					80.0	6, 7, 13, 17-22
021601	Power Supply 587153	Replace		0.2				3
		Repair					1.5	6, 7, 13, 17-22
		Test					0.2	13

See footnotes at end of table.

Table B-1. Maintenance Allocation Chart for Fire Direction Center, Artillery OA-8390/GSG-10(V) – Continued

(1) Group number	(2) Component assembly	(3) Maintenance function	(4) Maintenance category C	O	F	H	D	(5) Tools and equipment
021602	Panel Assy 588670	Inspect		0.1				
		Replace					1.5	6, 7
		Repair			1.0			6, 7
		Test			0.5			9
021603	Case Assy 587404	Replace					1.5	6, 7
		Repair			1.0			4, 6, 7
021604	Electronic Comp Assys 590111/590666	Replace			1.0			6, 7
		Repair			1.0			4, 6, 7
0217	Converter, Data CV-2863(V)/G 586068/586040	Inspect	0.1					
		Test	0.1					
		Replace		0.1				1
		Repair		0.5				3
021701	Case Assy 587403	Replace		0.1				1
		Repair			1.0			4, 7
021702	Digital Data Terminal 586118	Inspect	0.1					
		Test	0.1					
		Replace		0.1				1
		Repair		0.5				3
		Overhaul					60.0	6, 7, 13, 17-22
02170201	DC/DC Converter 126645	Replace		0.1				3
		Test				0.2 L		13
		Repair[2]				1.0 L		6, 7, 17-22

See footnotes at end of table.

615-9

Table B-1. Maintenance Allocation Chart for Fire Direction Center, Artillery OA-8390/GSG-10(V) – Continued

(1) Group number	(2) Component assembly	(3) Maintenance function	(4) Maintenance category C	O	F	H	D	(5) Tools and equipment
02170202	Circuit Cards, Plug-in	Inspect		0.1				
		Test		0.1				8
		Replace		0.1				3
		Test				0.2 L		13
		Repair[2]				1.0 L		6, 7, 17-22
02170203	Transformer Assy 588920	Replace			1.0			6
		Repair					2.0	6, 7
02170204	Fault Isolation Assy 588910	Inspect		0.1				
		Replace			1.0			6
		Repair					1.5	6, 7
02170205	Panel Assy, Front 586094	Replace					1.5	6, 7
		Repair[3]		0.1				3
		Repair			1.0			4
02170206	Card Rack Assys 586071/586072	Inspect		0.1				
		Replace					2.0	6, 7
		Repair					1.5	6, 7
0218	Control, Communications C-9901/G 586438	Inspect	0.1					
		Test	0.1					
		Test			1.0			14, 15, 16
		Replace		0.2				1
		Repair		0.5				3, 5
		Overhaul					80.0	6, 7, 13, 17-22

See footnotes at end of table.

Table B-1. Maintenance Allocation Chart for Fire Direction Center, Artillery OA-8390/GSG-10(V) – Continued

(1) Group number	(2) Component assembly	(3) Maintenance function	(4) Maintenance category C	O	F	H	D	(5) Tools and equipment
021801	Case Assy 587402	Replace		0.2				1
		Repair			1.0			4, 7
021802	Circuit Cards, Plug-in	Inspect		0.1				
		Test		0.1				8
		Replace		0.1				3
		Test				0.2 L		13
		Repair[2]				1.0 L		6, 7, 17-22
021803	Power Supply 591058	Replace		0.1				3
		Repair					1.5	6, 7, 13, 17-22
		Test					0.2	13
021804	Card Rack Assys 591056/591057	Inspect		0.1				
		Replace					2.0	6, 7
		Repair					1.5	6, 7
021805	Front Panel Assy 591052	Replace					2.0	6, 7
		Repair[3]		0.1				3
		Repair			1.5			
021806	Keyboard Assy 591054	Inspect		0.1				
		Replace		0.5				3
		Repair					1.5	6, 7, 17-22
021807	LED Assy 591055	Inspect		0.1				
		Replace		0.5				3
		Repair					1.5	6, 7, 17-22

See footnotes at end of table.

Table B-1. Maintenance Allocation Chart for Fire Direction Center, Artillery OA-8390/GSG-10(V) – Continued

(1) Group number	(2) Component assembly	(3) Maintenance function	(4) Maintenance category C	O	F	H	D	(5) Tools and equipment
03	Fire Direction Center, Arty, Disp OK-144/GSG-10 586329	Inspect	0.2					
		Install	1.0					
		Test		0.3				8
		Repair		0.5				1, 3, 5
0301	Shelter, Elec Equipment S-492/GSG-10 586347	Inspect	0.1					
		Repair[1]		0.5				5
0302	Air Conditioner/Heater (see TM 5-4120-243-14)							
0303	Telephone Set TA-312/PT (see TM 11-5805-201-12)							
0304	Interconnection Kit, Arty, Disp MK-1189/GSG-10 591032	Install	1.0					
		Replace		0.2				1
		Repair					1.0	6, 7
0305	Panel Assy, Power 586357	Replace			0.4			6
		Repair			1.5			6
0306	Junction Box 588583	Replace			0.4			6
		Repair			1.0			6
0307	Terminal Box, Telephone 590149	Replace			0.4			6
		Repair			1.0			6

See footnotes at end of table.

615-12

Table B-1. Maintenance Allocation Chart for Fire Direction Center, Artillery OA-8390/GSG-10(V) – Continued

(1) Group number	(2) Component assembly	(3) Maintenance function	(4) Maintenance category C	O	F	H	D	(5) Tools and equipment
0308	Terminal Box, Comm J-3355/GSG-10 586344	Replace		0.1				3
		Repair			1.0			6
0309	Display, Tactical Electronic AN/GSQ-121(V) 586031	Inspect	0.1					
		Test	0.1					
		Test			0.4			9-12, 14-16
		Adjust			0.3			9, 10, 11
		Replace		0.5				1, 3
		Repair		0.5				1, 3
		Repair[5]			1.0			4, 6
		Overhaul					100.0	6, 7, 13, 17-22
030901	Panel Assy Control 586299	Replace					2.0	6, 7
		Repair[3]		0.1				3
		Repair			1.0			4
030902	Deflection Amp 586161	Adjust			0.3			4, 11
		Replace			0.1			4, 6
		Repair					1.5	6, 7, 13, 17-22
030903	Power Supply, Defl Amp 586164	Replace			0.2			4
		Repair					1.5	6, 7, 13, 17-22
030904	Power Supply, High Voltage 586165	Adjust			0.3			4, 11, 12
		Replace			0.1			4
		Repair					1.5	6, 7, 13, 17-22

See footnotes at end of table.

Table B-1. Maintenance Allocation Chart for Fire Direction Center, Artillery OA-8390/GSG-10(V) – Continued

(1) Group number	(2) Component assembly	(3) Maintenance function	(4) Maintenance category C	O	F	H	D	(5) Tools and equipment
030905	DC/DC Converters 126650/126648	Replace		0.1				3
		Test				0.2 L		13
		Repair[2]				1.0 L		6, 7, 17-22
030906	Pen Processor Assy 586166	Adjust			0.3			4
		Replace			0.2			4, 6
		Repair					1.5	6, 7, 13, 17-22
030907	Focus-Astig. Amp 586163	Adjust			0.3			4
		Replace			0.2			4, 6
		Repair					1.5	6, 7, 12, 17-22
030908	Memory Assy 586236	Replace			0.3			4, 6
		Test				0.2 L		13
		Repair[2]				1.0 L		6, 7, 17-22
030909	Case Assy	Inspect		0.1				
		Replace		0.5				1
		Repair			1.0			4, 6
030910	Circuit Cards, Plug-in	Inspect		0.1				
		Test		0.1				8
		Replace		0.1				3
		Test				0.2 L		13
		Repair[2]				1.0 L		6, 7, 17-22

See footnotes at end of table.

Table B-1. Maintenance Allocation Chart for Fire Direction Center, Artillery OA-8390/GSG-10(V) – Continued

(1) Group number	(2) Component assembly	(3) Maintenance function	(4) Maintenance category C	O	F	H	D	(5) Tools and equipment
030911	Light Pen Assy 865147-1	Inspect		0.1				
		Replace		0.5				3
		Repair					2.0	6, 7
0310	Display Unit, Digital Plotting PT-493/G 586030	Inspect	0.1					
		Test	0.1					
		Service	0.1					
		Adjust			0.2			4
		Replace		0.5				1
		Repair		0.5				3
		Overhaul					130.0	6, 7, 13, 17-22
031001	Hand Control Assy 595010	Inspect	0.1					
		Replace		0.1				3
		Repair			1.0			4, 6
031002	Recorder, Plotting Display RO-427/G 586941	Inspect	0.1					
		Replace		0.3				1
		Repair		0.1				3
		Repair			0.5			4, 6
		Overhaul					50.0	6, 7, 13, 17-22
03100201	Spline and Bracket Assy 595027	Inspect			0.1			
		Service	0.1					
		Replace					1.0	6, 7
		Repair					1.5	6, 7

See footnotes at end of table.

Table B-1. Maintenance Allocation Chart for Fire Direction Center, Artillery OA-8390/GSG-10(V) – Continued

(1)	(2)	(3)	(4) Maintenance category					(5)
Group number	Component assembly	Maintenance function	C	O	F	H	D	Tools and equipment
03100202	Panel Assy, Control 595040	Inspect	0.1					
		Replace			0.5			4, 6
		Repair[3]		0.1				3
		Repair			1.0			4, 7
03100203	Bridge and Write Head Assy 586950/586944	Inspect	0.1					
		Service[6]	0.1					
		Adjust			0.2			4, 6
		Replace					1.0	6, 7
		Repair			0.3			4, 6
03100204	Drive Assys, X and Y 586948	Replace			0.2			4, 6
		Repair					1.5	6, 7
03100205	Power Supply 586953	Replace			0.3			4, 6
		Repair					1.5	6, 7, 13, 17-22
		Test				0.2 L		13
03100206	Electronics Assy 586947	Adjust			0.5			4, 6
		Replace			0.5			4, 6
		Repair					1.0	6, 7, 13, 17-22
03100207	Compensator, Chain Tension 595122	Inspect	0.1					
		Service			0.2			4, 6
		Adjust			0.3			4, 6
		Replace			0.4			4, 6
		Repair			0.4			4, 6

See footnotes at end of table.

615-16

Table B-1. Maintenance Allocation Chart for Fire Direction Center, Artillery OA-8390/GSG-10(V) – Continued

(1) Group number	(2) Component assembly	(3) Maintenance function	(4) Maintenance category C	O	F	H	D	(5) Tools and equipment
03100208	Lamp Assy	Inspect	0.1					
		Replace			0.1			4, 6
		Repair[3]		0.1				3
03100209	Case Assy 587407	Inspect	0.1					
		Replace		0.1				1
		Repair			1.0			4, 7
031003	Control, Plotting Display C-8819/G 586942	Inspect	0.1					
		Replace		0.1				3
		Repair		0.5				3
		Overhaul					80.0	6, 7, 13, 17-22
03100301	Power Supplies AC/DC 126646/126647	Replace		0.1				3
		Test				0.2 L		13
		Repair[2]				1.0 L		6, 7, 17-22
03100302	Circuit Cards, Plug-in	Inspect		0.1				
		Test		0.1				8
		Replace		0.1				3
		Test				0.2 L		13
		Repair[2]				1.0 L		6, 7, 17-22
03100303	Amplifier, Electronic Control 586974	Replace			0.2			4, 6
		Repair					1.5	6, 7, 13, 17-22

See footnotes at end of table.

615-17

Table B-1. Maintenance Allocation Chart for Fire Direction Center, Artillery OA-8390/GSG-10(V) – Continued

(1) Group number	(2) Component assembly	(3) Maintenance function	(4) Maintenance category C	O	F	H	D	(5) Tools and equipment
03100304	Rack, Elect Equip 586972	Inspect		0.1				
		Replace					1.5	6, 7
		Repair					2.0	6, 7
03100305	Case Assy 587402	Inspect	0.1					
		Replace		0.1				1
		Repair			1.0			4, 7
03100306	Front Panel Assy 595173	Inspect	0.1					
		Repair[3]	0.1					
		Repair		1.5				
0311	Line Printer, Electronic RO-344/GSG-10(V) 586325	Inspect	0.1					
		Test	0.1					
		Service	0.1					
		Replace		0.3				1
		Repair		0.5				3
		Overhaul					80.0	6, 7, 13, 17-22
031101	Printer Assy 174333	Inspect		0.1				
		Replace		0.5				3
		Repair		0.5				3
03110101	Cable Assy's 174319, 174402	Replace			1.0			6, 7
		Repair					1.0	6, 7

See footnotes at end of table.

615-18

Table B-1. Maintenance Allocation Chart for Fire Direction Center, Artillery OA-8390/GSG-10(V) – Continued

(1) Group number	(2) Component assembly	(3) Maintenance function	(4) Maintenance category C	O	F	H	D	(5) Tools and equipment
03110102	Housing Assy 174313	Replace					0.5	6, 7
		Repair					1.0	6, 7
03110103	Paper Tray and Door Assy 174332	Replace					1.0	6, 7
		Repair			0.5			4, 6
		Service			0.4			4, 6
0311010301	Paper Transport Assy 174325	Replace			1.0			6, 7
		Repair			0.5			4, 6
0311010302	Access Door and Control Panel Assy 174326	Replace					2.0	6, 7
		Repair			1.0			4, 6
03110103021	Control Panel Assy 174104	Inspect	0.1					
		Replace			2.0			6, 7
		Repair[3]		0.1				3
		Repair			1.0			4
03110103022	Cable Assy 174164	Replace			1.0			6, 7
		Repair					1.0	6, 7
0311010303	Wire Wrap Panel Assy 174308	Replace					1.0	6, 7
		Repair					1.0	6, 7
0311010304	Cable Assy's 174306 and 174320	Replace			1.0			6, 7
		Repair					1.0	6, 7

See footnotes at end of table.

Table B-1. Maintenance Allocation Chart for Fire Direction Center, Artillery OA-8390/GSG-10(V) – Continued

(1) Group number	(2) Component assembly	(3) Maintenance function	(4) Maintenance category C	O	F	H	D	(5) Tools and equipment
03110104	Circuit Cards, Plug-in	Inspect		0.1				
		Test		0.1				8
		Replace		0.1				3
		Repair					1.0	6, 7, 13, 17-22
		Test					0.2	13
03110105	DC/DC Converter 174327	Replace		0.1				3
		Repair					1.0	6, 7, 13, 17-22
		Test					0.2	13
031102	Case Assy 174322	Replace		0.1				3
		Repair			1.0			4, 6
0312	Console, Arty Control OJ-70/GSG-10 586028	Inspect	0.1					
		Test	0.1					
		Replace		0.1				1
		Repair		0.5				3
031201	Case Assy 587401	Replace		0.1				1
		Repair			1.0			4, 7
031202	Keyboard, Editor 586379	Replace		0.1				
		Repair			0.5			4, 6
		Overhaul					60.0	6, 7, 13, 17-22
03120201	Chassis Assy 588732	Replace		0.5				3
		Repair			0.5			4

See footnotes at end of table.

615-20

Table B-1. Maintenance Allocation Chart for Fire Direction Center, Artillery OA-8390/GSG-10(V) – Continued

(1) Group number	(2) Component assembly	(3) Maintenance function	(4) Maintenance category C	O	F	H	D	(5) Tools and equipment
0312020101	Circuit Cards, Plug-in	Replace			0.5			4
		Test					0.2	13
		Repair					1.0	6, 7, 17-22
031203	Switch Panel Assy 586115	Inspect	0.1					
		Test	0.1					
		Replace		0.1				1
		Repair		0.5				3
		Overhaul					60.0	6, 7, 13, 17-22
03120301	Circuit Cards, Plug-in	Inspect		0.1				
		Test		0.1				8
		Replace		0.1				3
		Test				0.2 L		13
		Repair[2]				1.0 L		6, 7, 17-22
03120302	DC/DC Converter 587655	Replace		0.1				3
		Repair					1.5	6, 7, 13, 17-22
		Test					0.2	13
03120303	Panel Assy, Front 586159	Inspect	0.1					
		Replace					2.0	6, 7
		Repair[3]		0.1				3
		Repair			1.0			4
03120304	Card Rack Assy 586470	Inspect		0.1				
		Replace					1.5	6, 7
		Repair					2.0	6, 7

See footnotes at end of table.

Table B-1. Maintenance Allocation Chart for Fire Direction Center, Artillery OA-8390/GSG-10(V) – Continued

(1) Group number	(2) Component assembly	(3) Maintenance function	(4) Maintenance category C	O	F	H	D	(5) Tools and equipment
031204	Display Editor 586472	Inspect	0.1					
		Test		0.1				8
		Test			0.4			9-12, 14-16
		Adjust			0.3			9, 10, 11
		Replace		0.1				1, 3
		Repair		0.5				1, 3
		Overhaul					80.0	6, 7, 13, 17-22
03120401	Power Supply, High Voltage 154282	Adjust			0.3			4, 11, 12
		Replace			0.1			4
		Repair					1.5	6, 7, 13, 17-22
03120402	DC/DC Converter 587655	Replace		0.1				3
		Repair					1.5	6, 7, 13, 17-22
		Test					0.2	13
03120403	Circuit Cards, Plug-in	Inspect		0.1				
		Test		0.1				8
		Replace		0.1				3
		Test				0.2 L		13
		Repair[2]				1.0 L		6, 7, 17-22
03120404	Deflection Amp 154278	Adjust			0.3			4, 11
		Replace			0.1			4, 6
		Repair					1.5	6, 7, 13, 17-22
03120405	Cable Assy 586441	Replace					1.0	6, 7
		Repair					1.0	6, 7

See footnotes at end of table.

615-22

Table B-1. Maintenance Allocation Chart for Fire Direction Center, Artillery OA-8390/GSG-10(V) – Continued

(1) Group number	(2) Component assembly	(3) Maintenance function	(4) Maintenance category C	O	F	H	D	(5) Tools and equipment
03120406	Display Editor Subassy 586473	Inspect		0.1				
		Replace					1.5	6, 7
		Repair[3]		0.1				3
		Repair[7]			1.0			4, 6
03120407	Card Racks 154280/154281	Inspect		0.1				
		Replace					1.5	6, 7
		Repair					2.0	6, 7
0313	Converter Group, Power OU-41/GSG-10 586023-105 (see group 0216)							
0314	Monitor, Remote Comm MX-9842/G 586318	Inspect	0.1					
		Test	0.1					
		Replace		0.2				1
		Repair		0.5				3, 5
		Overhaul					40.0	6, 7, 13, 17-22
031401	Front Panel Assy 591092	Replace		0.2				3
		Repair[3]		0.5				3
		Repair			1.5			
03140101	Circuit Card, Plug-in 591093	Inspect		0.1				
		Test					1.0	13
		Replace		0.5				3
		Repair					1.0	6, 7, 17-22

See footnotes at end of table.

615-23

Table B-1. Maintenance Allocation Chart for Fire Direction Center, Artillery OA-8390/GSG-10(V) – Continued

(1)	(2)	(3)	(4) Maintenance category					(5)
Group number	Component assembly	Maintenance function	C	O	F	H	D	Tools and equipment
031402	Case Assy 591251	Replace Repair		0.5	 1.0			3 4, 7
0315	Headset H-144/U (see TM 11-5965-206-15P)							

(1) See TB 750-240 for basic shelter maintenance.
(2) The following cards/modules will be tested and repaired at SRA's: 126645-126650, 126657, 586236, 587011-587016, 587100-587114, 587116, 587117, 587121, 587127, 587130, 587135, 587138, 587140, 587143, 587163, 587165, 587166, 587240.
(3) Replace bulbs, knobs, etc.
(4) 330 and 1000 hour pm required.
(5) Replace CRT, 860032-14.
(6) Replace pen assembly.
(7) Replace CRT, 865196-1.

615-24

Table B-2. Maintenance Allocation Chart for Fire Direction Center, Artillery Processing and Display OA-8389/GSG-10(V)

(1) Group number	(2) Component assembly	(3) Maintenance function	(4) Maintenance category C	O	F	H	D	(5) Tools and equipment
00	Fire Direction Center, Arty, Proc & Disp OA-8389/GSG-10 586327	Inspect	0.1					
		Test		0.3				8
		Service		0.1				3
		Install	1.0					
		Repair		0.5				1, 2, 3, 5
		Test					2.0	23
01	Shelter, Elec Equipment S-491/GSG-10 586345	Inspect	0.1					
		Repair[1]		0.5				5
02	Air Conditioner/Heater (see TM 5-4120-243-14)							
03	Telephone Set TA-312/PT (see TM 11-5805-201-12)							
04	Radio Set AN/VRC-46 (see TM 11-5820-401-12)							
05	Electronic Tactical Key Generator KG-30 (see TM KAM-237( )/TSEC)							
06	Panel Assy, Power 586357	Replace			0.4			6
		Repair			1.5			6

(1) See TB 750-240 for basic shelter maintenance.

616-1

Table B-2. Maintenance Allocation Chart for Fire Direction Center, Artillery Processing and Display OA-8389/GSG-10(V) – Continued

(1) Group number	(2) Component assembly	(3) Maintenance function	(4) Maintenance category C	O	F	H	D	(5) Tools and equipment
07	Junction Box 588583	Replace			0.4			6
		Repair			1.0			6
08	Headset H-144/U (see TM 11-5965-206-15P)							
09	Terminal Box J-3321/GSG-10 586442-102	Inspect	0.1					
		Replace		0.3				3
		Repair			1.0			6, 7
10	Terminal Box 590149	Replace			0.4			6
		Repair			1.0			6
11	Intercon Kit, Arty, Proc & Disp MK-1130/GSG-10 & MK-1785/GSG-10 591030/591034	Inspect	0.1					
		Install	1.0					
		Replace		0.2				1, 5
		Test					0.5	9
		Repair					1.0	6, 7
12	Test Set, Module AN/GSM-208 586112 (see group 0212 in Table B-1							
13	Computer Digital AN/GYK-12(V)2 586017-102 (see group 0213 in Table B-1)							

616-2

Table B-2. Maintenance Allocation Chart for Fire Direction Center, Artillery Processing and Display OA-8389/GSG-10(V) – Continued

(1) Group number	(2) Component assembly	(3) Maintenance function	(4) Maintenance category C	O	F	H	D	(5) Tools and equipment
1301	Central Processing Unit MX-8950/GYK 586018 (see group 021301 in Table B-1)							
1302	Input/Output Unit MX-8951/GYK 586098 (see group 021302 in Table B-1)							
1303	Memory Unit, Mass Core MU-619/GYK 586320 (see group 021302 in Table B-1)							
14	Control, Tape Transport Cartridge C-8756(V)1/GYK 586351-100, or Control, Magnetic Tape Unit C-10679(V)1/GYK12(V) 586351-102 (see group 0214 in Table B-1)							
15	Tape Transport Cartridge MX-8952/GYK 586139 (see group 0215 in Table B-1)							
16	Converter Group, Power OU-41/GSG-10 586023-105 (see group 0216 in Table B-1)							
17	Converter, Data CV-2863(V)/G 586068 (see group 0217 in Table B-1)							

616-3

Table B-2. Maintenance Allocation Chart for Fire Direction Center, Artillery Processing and Display OA-8389/GSG-10(V) – Continued

(1)	(2)	(3)	Maintenance category					(5)
Group number	Component assembly	Maintenance function	C	O	F	H	D	Tools and equipment
18	Display Unit, Digital Plotting PT-493/G 586030 (see group 0310 in Table B-1)							
19	Line Printer, Electronic RO-344/G 586325 (see group 0311 in Table B-1)							
20	Console, Arty Control OJ-70/GSG-10 586028 (see group 0312 in Table B-1)							
21	Control, Communications C-9901/G 586438 (see group 0218 in Table B-1)							
22	Monitor, Remote Comm MX-9842/G 586138 (see group 0314 in Table B-1)							

616-4

Table B-3. Maintenance Allocation Chart for Message Entry Device, Variable Format AN/GSC-21

(1) Group number	(2) Component assembly	(3) Maintenance function	(4) Maintenance category C	O	F	H	D	(5) Tools and equipment
00	Message Entry Device, Variable Format AN/GSG-21 586500	Inspect	0.1					
		Test		0.3				
		Service		0.2				3
		Install	0.2					
		Repair		0.7				2, 3
01	Message Entry Control C-10097/GSG-21 586503	Inspect	0.1					
		Test		0.3				
		Service		0.2				3
		Repair		0.7				2, 3
0101	Remote Data Terminal 586458	Inspect	0.1					
		Test		0.3				8
		Replace		0.1				3
		Repair		0.5				3
		Overhaul					60.0	6, 7, 13, 17-22
010101	Panel Assy 588452	Inspect	0.1					
		Replace					2.0	6, 7
		Repair[1]		0.1				3
		Repair			1.0			4, 7
010102	Circuit Cards, Plug-in	Inspect		0.1				
		Test		0.1				8
		Replace		0.1				3
		Test				0.2 L		13
		Repair[2]				1.0 L		6, 7, 17-22

See footnotes at end of table.

617-1

Table B-3. Maintenance Allocation Chart for Message Entry Device, Variable Format AN/GSC-21 – Continued

(1)	(2)	(3)	(4) Maintenance category					(5)
Group number	Component assembly	Maintenance function	C	O	F	H	D	Tools and equipment
010103	Card Racks 588449/588450	Inspect Replace Repair		0.1			 1.5 2.0	 6, 7 6, 7
010104	DC/DC Converter 587655	Replace Repair Test		0.1			 1.5 0.2	3 6, 7, 13, 17-22 3
010105	Electronic Components Assy 588675	Replace Repair			0.5		 2.0	4 6, 7, 13, 17-22
0102	Display Editor 586472 (see group 031204 in Table B-1)							
0103	Keyboard, Editor 586379 (see group 031202 in Table B-1)							
0104	Case Assy 587402	Replace Repair		0.2	 1.0			3 4, 7
02	Line Printer, Electronic RO-344/GSG-10(V) 586325 (see group 0311 in Table B-1)							

See footnotes at end of table.

617-2

Table B-3. Maintenance Allocation Chart for Message Entry Device, Variable Format AN/GSC-21 – Continued

(1) Group number	(2) Component assembly	(3) Maintenance function	(4) Maintenance category C	O	F	H	D	(5) Tools and equipment
03	Interconnection Kit, Message Entry Device MK-1783/GSC-21 591037	Install		0.2				
		Replace		0.1				
		Test					0.5	9
		Repair					1.0	6, 7

(1) Replace bulbs, knobs, etc.
(2) The following cards/modules will be tested and repaired at SRS's: 587100, 587102, 587104, 587105, 587106, 587117, 587143.

617-3

Table B-4. Maintenance Allocation Chart for Data Display, Artillery Battery AN/GSQ-122

(1) Group number	(2) Component assembly	(3) Maintenance function	(4) Maintenance category C	O	F	H	D	(5) Tools and equipment
00	Data Display, Arty, Btry AN/GSQ-122 586501	Inspect	0.1					
		Test		0.3				3
		Service		0.2				
		Install	0.2					
		Repair		0.7				2, 3
01	Control, Data Display C-10096/GSQ-122 586502	Inspect	0.1					
		Test		0.3				
		Service		0.2				3
		Repair		0.7				2, 3
0101	Remote Data Terminal 586458 (see group 0101 in Table B-3)							
0102	Case Assy 587402	Replace		0.2				3
		Repair			1.0			4, 7
02	Line Printer, Electronic RO-344/GSG-10(V) 586325 (see group 0311 in Table B-1							
03	Interconnection Kit, Data Display MK-1784 GSQ-122 591038	Install		0.2				
		Replace		0.1				
		Test					0.5	9
		Repair					1.0	6, 7

618

Table B-5. Tool and Test Equipment Requirements for Fire Direction Center, Artillery AN/GSG-10(V)

Tool or test equipment ref code	Maintenance category	Nomenclature	National NATO stock number	Tool Number
1	O	Tool Kit TK-223	5180-00-626-8331	
2	O	Tool Kit TK-224	5180-00-626-8965	
3	O	Tool Kit TK-225	5180-00-626-8332	
4	F	Tool Kit TK-226	5180-00-626-8966	
5	O	Tool Kit, Electronic Equip TK-101/G	5180-00-064-5178	
6	F, H, D	Tool Kit, Electronic Equip TK-105/G	5180-00-610-8177	
7	F, H, D	Tool Kit, Electronic Equip TK-100/G	5180-00-605-0079	
8	O, F	Test Set, Module AN/GSM-208		
9	F	Multimeter TS-352B/U	6625-00-553-0142	
10	F	Oscilloscope AN/USM-281A	6625-00-228-2201	
11	F	Multimeter ME-26B/U	6625-00-646-9409	
12	F	High Voltage Probe MX-2517/U	6625-00-511-5383	
13	H, D	Test Station, Electronic Equip AN/USM-410	6625-00-614-9535	
14	F	Passive Maintenance Device		
15	F	Converter Group, Power OU-41/GSG-10		
16	F	Cables, Consisting of: 591281-171 591283-171 591164-171 595504-171 591189-171 591174-171 591220-171 591284-171 591282-171		

Table B-5. Tool and Test Equipment Requirements for Fire Direction Center, Artillery AN/GSG-10(V) – Continued

Tool or test equipment ref code	Maintenance category	Nomenclature	National NATO stock number	Tool number
17	H, D	Magnifier, 5" Diameter	6650-00-356-8411	
18	H, D	Magnifier, 10 Power		
19	H, D	Clean Bench, Table Top		TM-48
20	H, D	Pace Soldering Kit	3439-00-196-0703	PRC-350C
21	H, D	Black Light		XX-15
22	H, D	Goggles, Safety		UVC-303
23	D	Test Set Computer, AN/GSM-209		

619-2

APPENDIX C

GLOSSARY

A

ACC	artillery control console
ACK	acknowledge
AN	alphanumeric
ARMM	auxiliary removable media memory
ASCII	American Standard Code For Information Interchange

B

BDU	battery display unit
Bn	battalion
BOT	beginning of tape

C

CCU	communications control unit
CCW	counterclockwise
CED	compose/edit display
CJB	communications junction box
COMSEC	communications security
CPU	central processing unit
CSIN	communications security interface network
CTB	communications terminal box
CTS	computer test set
CU	communications unit
CW	clockwise

D

D/A	digital to analog
DCU	display control unit

DDT	digital data terminal
DE	display editor
DEC	data exchange channel
DEV	device command
DEX	device command and exit
DivArty	Division Artillery
DMD	digital message device
DPM	digital plotter map
DPU	display plotting unit
DTU	data terminal unit

E

ELP	electronic line printer
EMI	electromagnetic interference
EOB	end of block
EOT	end of tape (also end of transmission)
ETD	electronic tactical display

F

FD	fault detection
FDC	fire direction center
FI	fault isolation
FSK	frequency shift key
FSO	fire support officer

H

hv	high voltage
HVPS	high voltage power supply

I

I/O	input/output
IOC	input/output controller

IOU	input/output unit
IOX	input/output exchange
IPS	inches per second
IRG	inter-record gap
ITR	input to register

L

LED	light-emitting diode
LPW	last position word
LRC	longitudinal redundancy check
LSB	least significant bit

M

M&D	maintenance and diagnostic
MBA	memory bank assignment
MCMU	mass core memory unit
MEG	message entry group
MODEM	modulator/demodulator
MSB	most significant bit
MTC	magnetic tape cartridge
MTS	module test set
MTT	magnetic tape transport
MTU	magnetic tape unit
MUX	multiplex

N

NAK	nonacknowledge

O

OC	over current
OFR	output from register
OV	overvoltage

P

PAR	program activity register
PCG	power converter group
PEP	power entry panel

R

RCMU	remote communications monitor unit
RD	receive display
RDT	remote data terminal
RMMU	removable media memory unit
ROM	read only memory
RPSTL	repair parts and special tools list
RTC	real time clock

S

SMR	source, maintenance, and recoverability (codes for support items in RPSTL)
SPA	switch panel assembly
SPR	salvage point recording

T

TACFIRE	artillery fire direction system
TBF	target, box, flag (DPM special symbols)
TTC	tape transport cartridge
TTL	transistor/transistor logic

V

VFMED	variable format message entry device
VOX	voice operated transmitter keyer
XFC	transmit from cursor

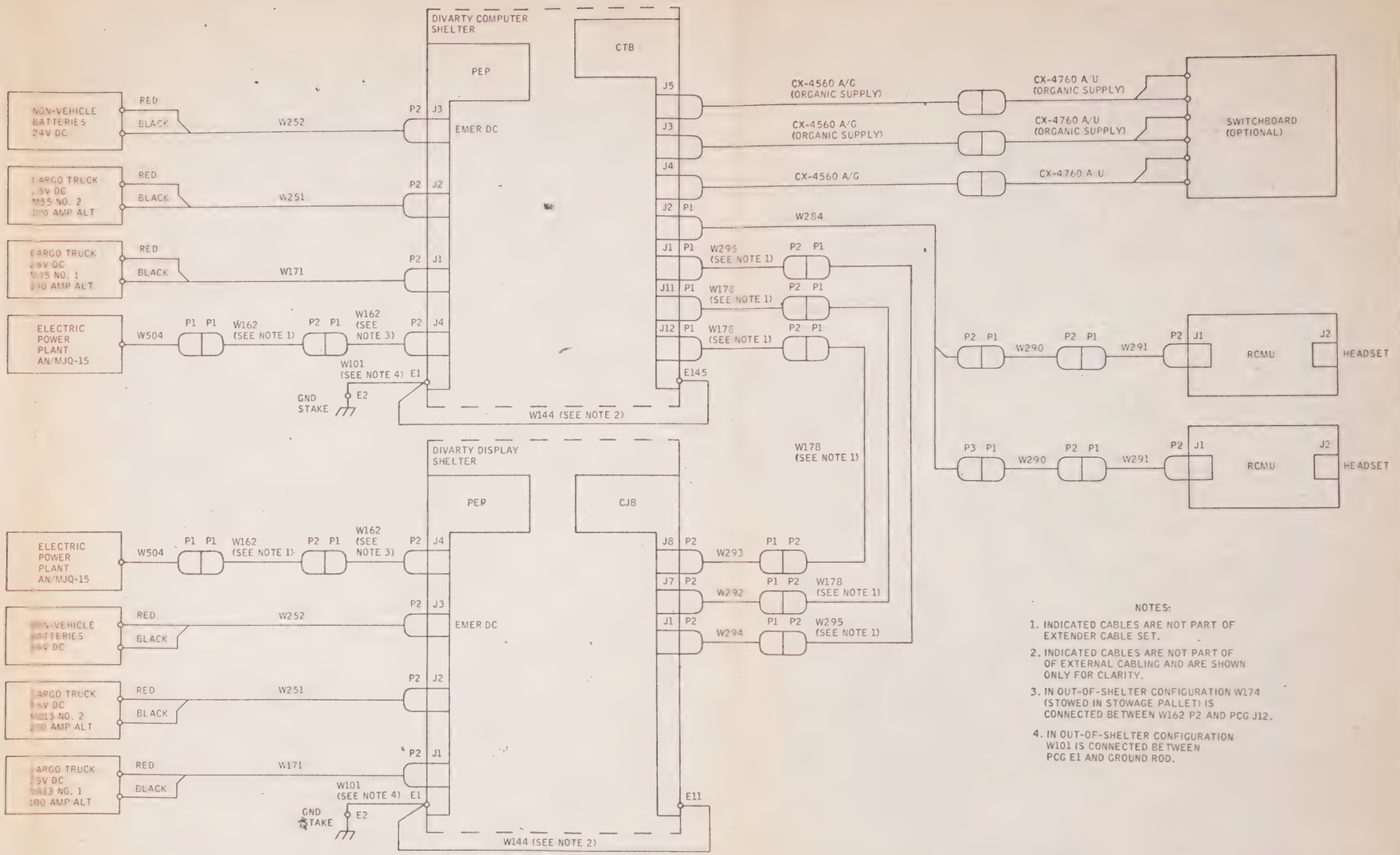

NOTES:

1. INDICATED CABLES ARE NOT PART OF EXTENDER CABLE SET.
2. INDICATED CABLES ARE NOT PART OF OF EXTERNAL CABLING AND ARE SHOWN ONLY FOR CLARITY.
3. IN OUT-OF-SHELTER CONFIGURATION W174 (STOWED IN STOWAGE PALLET) IS CONNECTED BETWEEN W162 P2 AND PCG J12.
4. IN OUT-OF-SHELTER CONFIGURATION W101 IS CONNECTED BETWEEN PCG E1 AND GROUND ROD.

ELOACOBO

FO-1. DivArty Computer Group and Display Group Interconnect Diagram

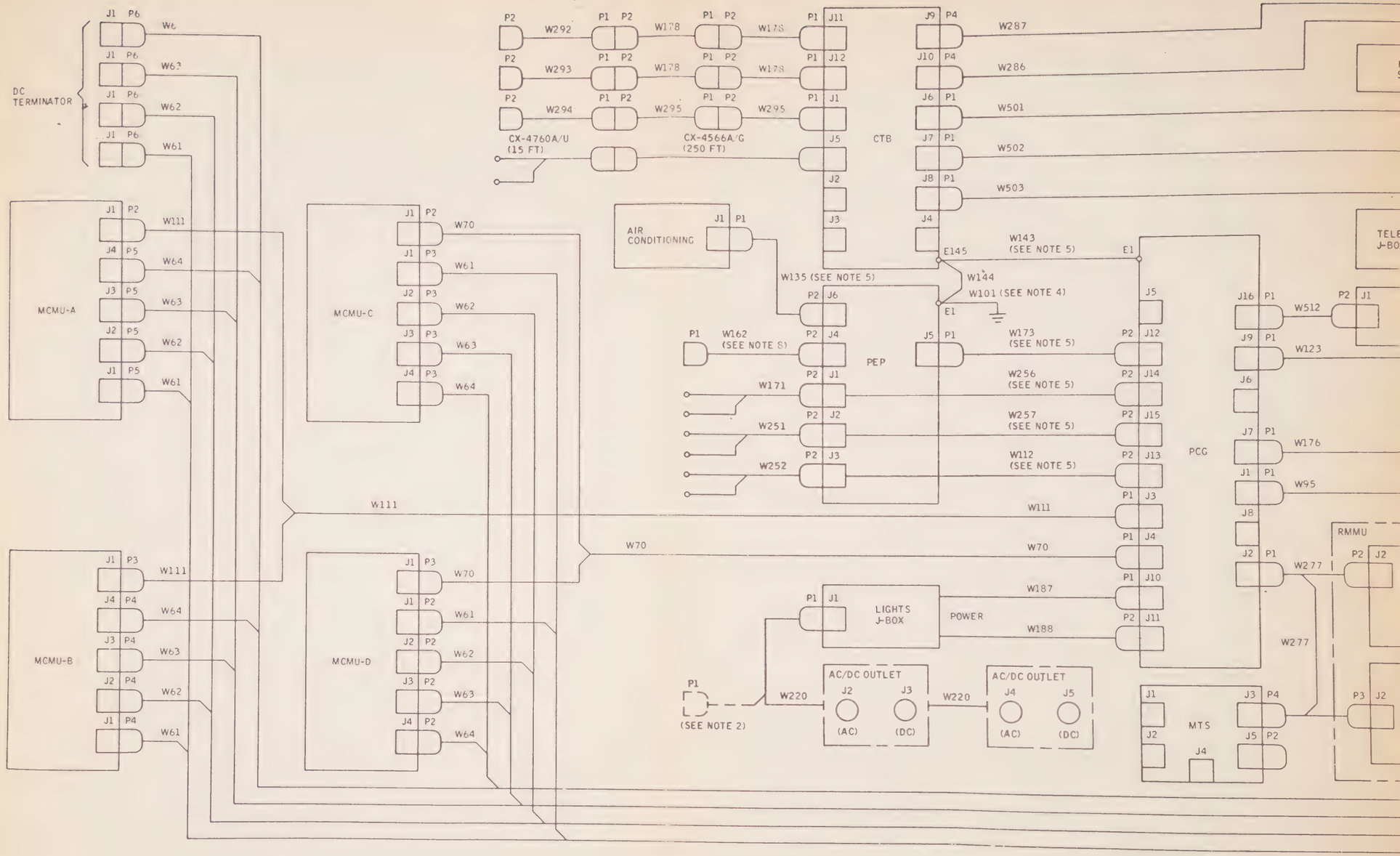
DC TERMINATOR
MCMU-A
MCMU-B
MCMU-C
MCMU-D
CX-4760A/U (15 FT)
CX-4566A/G (250 FT)
CTB
AIR CONDITIONING
PEP
LIGHTS J-BOX
POWER
AC/DC OUTLET
(AC)
(DC)
(SEE NOTE 2)
MTS
PCG
RMMU
W143 (SEE NOTE 5)
W144
W101 (SEE NOTE 4)
W135 (SEE NOTE 5)
W162 (SEE NOTE 5)
W173 (SEE NOTE 5)
W256 (SEE NOTE 5)
W257 (SEE NOTE 5)
W112 (SEE NOTE 5)
W220
W277

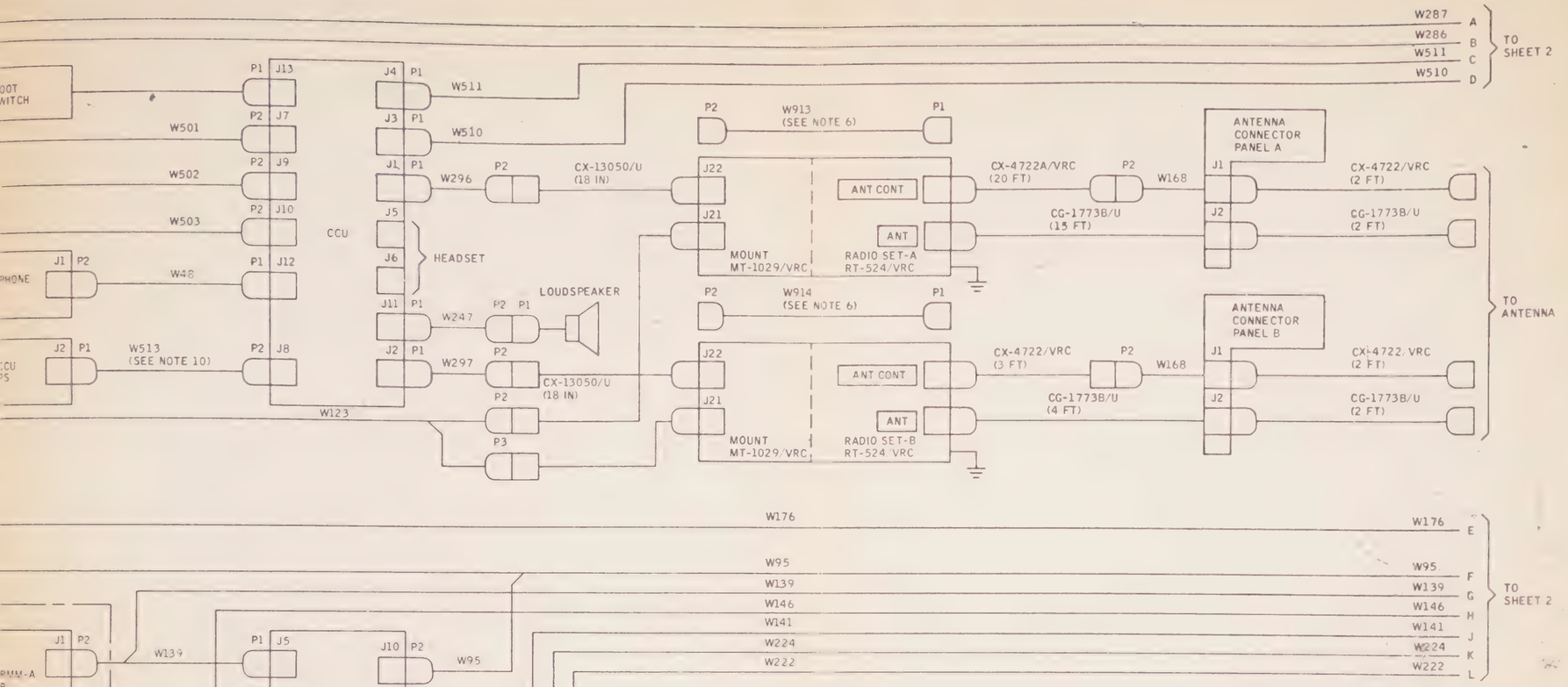

NOTES:

1. FOR COMPLETE REFERENCE DESIGNATION, PREFIX PART DESIGNATION WITH APPLICABLE UNIT, ASSEMBLY AND SUBASSEMBLY DESIGNATIONS.
2. CABLE W220 CONNECTS WITH PCG J11 FOR OUT-OF-SHELTER CONFIGURATION.
3. CABLE W144 CONNECTS BETWEEN CTB E1 AND PCG E1 FOR OUT-OF-SHELTER CONFIGURATION.
4. CABLE W101 CONNECTS BETWEEN PCG E1 AND GROUND ROD FOR OUT-OF-SHELTER CONFIGURATION.
5. PART OF FIXED CABLE SET 591033.
6. FOR DEGRADED MODE OPERATION, CONNECT CABLES W913 AND W914 BETWEEN RADIO MOUNT MT-1029/VRC J22 AND DDT J6.
7. FOR KG-31 OPERATION USE CABLE W97 FOR POWER, CABLE W71 FOR BLACK AND CABLE W46 FOR RED CIRCUITS AND CABLE W51 FOR GROUND ROD.
8. CABLE W174 CONNECTS BETWEEN CABLE W162 P2 AND PCG J12 FOR OUT-OF-SHELTER CONFIGURATION.
9. CABLE W265 IS PART OF DTU.
10. CABLE W513 IS PART OF CCU.
11. ▭ INDICATES EQUIPMENT MARKINGS.

ELOAC081

FO-2. DivArty Computer Group Interconnect Diagram (Sheet 1 of 2)

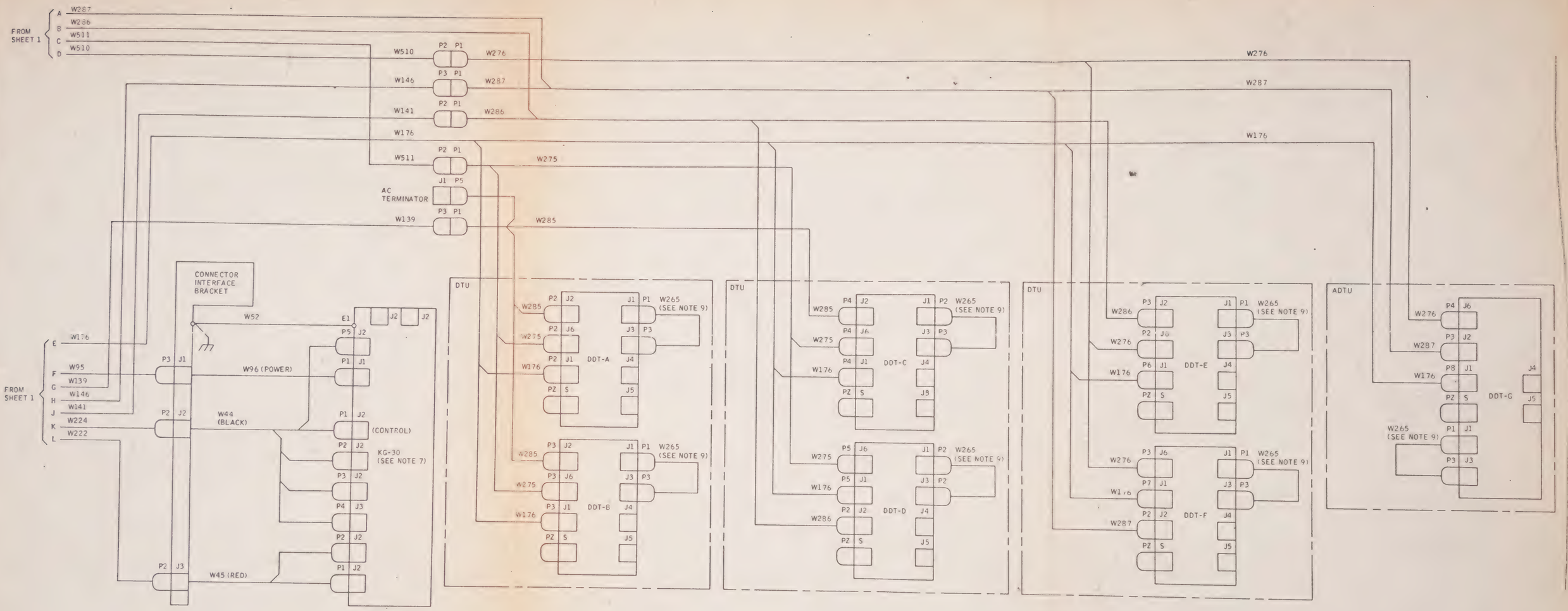

ELOAC082

FO-2. DivArty Computer Group Interconnect Diagram (Sheet 2 of 2)

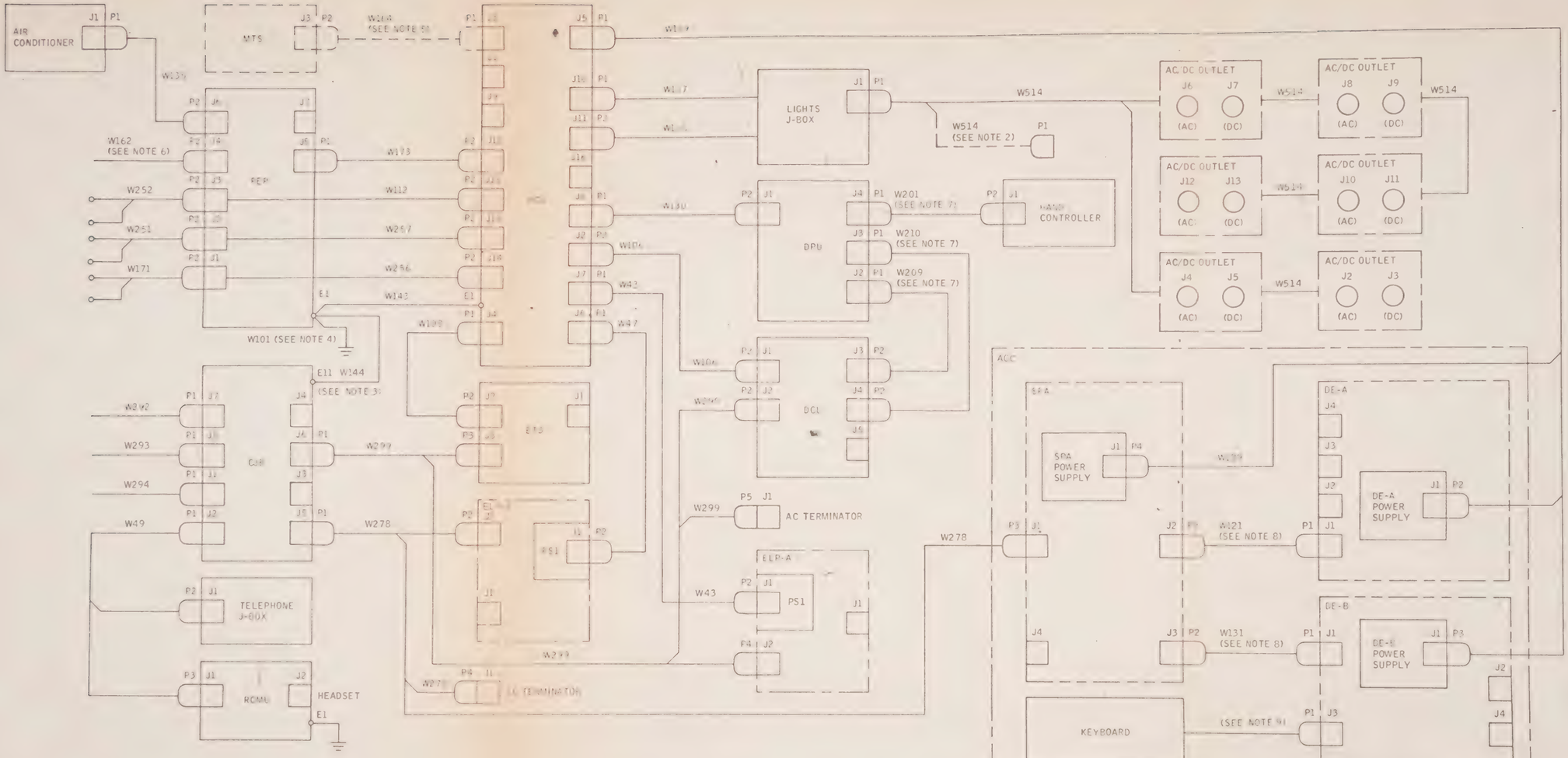

NOTES:

1. FOR COMPLETE REFERENCE DESIGNATION, PREFIX PART DESIGNATION WITH APPLICABLE UNIT, ASSEMBLY AND SUBASSEMBLY DESIGNATIONS.
2. FOR OUT-OF-SHELTER CONFIGURATION CONNECT CABLE W514 TO PCG J11.
3. FOR OUT-OF-SHELTER CONFIGURATION CONNECT CABLE W144 BETWEEN CJB E11 AND PCG E1.
4. FOR OUT-OF-SHELTER CONFIGURATION CONNECT CABLE W101 BETWEEN PCG AND GROUND ROD
5. CABLE W164 TO BE STORED IN SHELTER AND USED ONLY AFTER INSTALLATION OF MTS.
6. FOR OUT-OF-SHELTER CONFIGURATION CONNECT CABLE W174 BETWEEN CABLE W162 P2 AND PCG J12.
7. CABLE IS PART OF DPM.
8. CABLE IS PART OF ACC.
9. CABLE IS PART OF KEYBOARD.

ELOAC083

FO-3. DivArty Display Group Interconnect Diagram

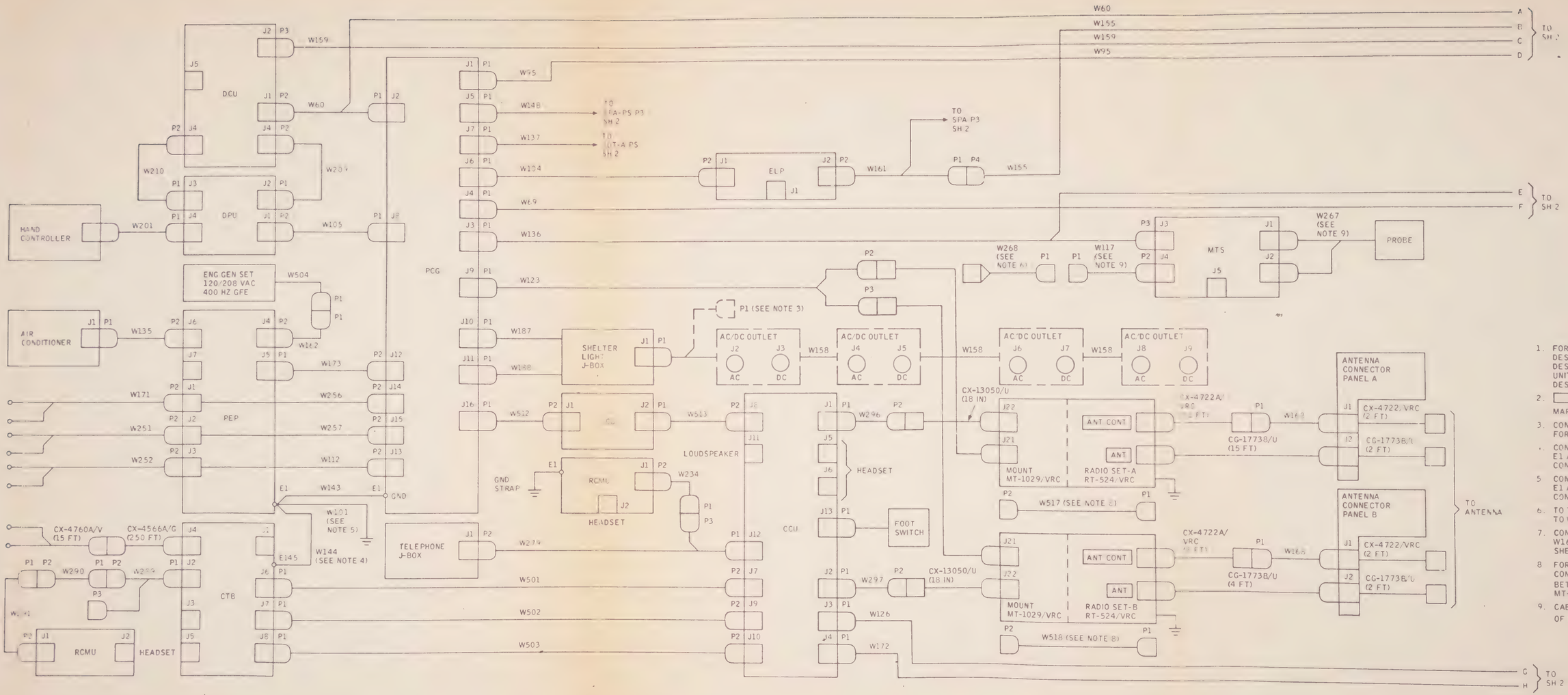

NOTES:

1. FOR COMPLETE REFERENCE DESIGNATION, PREFIX PART DESIGNATION WITH APPLICABLE UNIT, ASSEMBLY, AND SUBASSEMBLY DESIGNATION.
2. ▭ INDICATES EQUIPMENT MARKING.
3. CONNECT CABLE W158 WITH PCG J11 FOR OUT-OF-SHELTER CONFIGURATION.
4. CONNECT CABLE W144 BETWEEN CTB E1 AND PCG E1 FOR OUT-OF-SHELTER CONFIGURATION.
5. CONNECT CABLE W101 BETWEEN PCG E1 AND GND ROD FOR OUT-OF-SHELTER CONFIGURATION.
6. TO TEST MCMU CONNECT W268P1 TO W117P1.
7. CONNECT CABLE W174 BETWEEN W162P2 AND PCG J12 FOR OUT-OF-SHELTER CONFIGURATION.
8. FOR DEGRADED MODE OPERATION CONNECT CABLES W517 AND W518 BETWEEN RADIO MOUNT MT-1029/VRC J22 AND DDT J6.
9. CABLE W117 AND W267 ARE PART OF MTS.

FO-4. Bn Computer and Display Group Interconnect Diagram (Sheet 1 of 2)

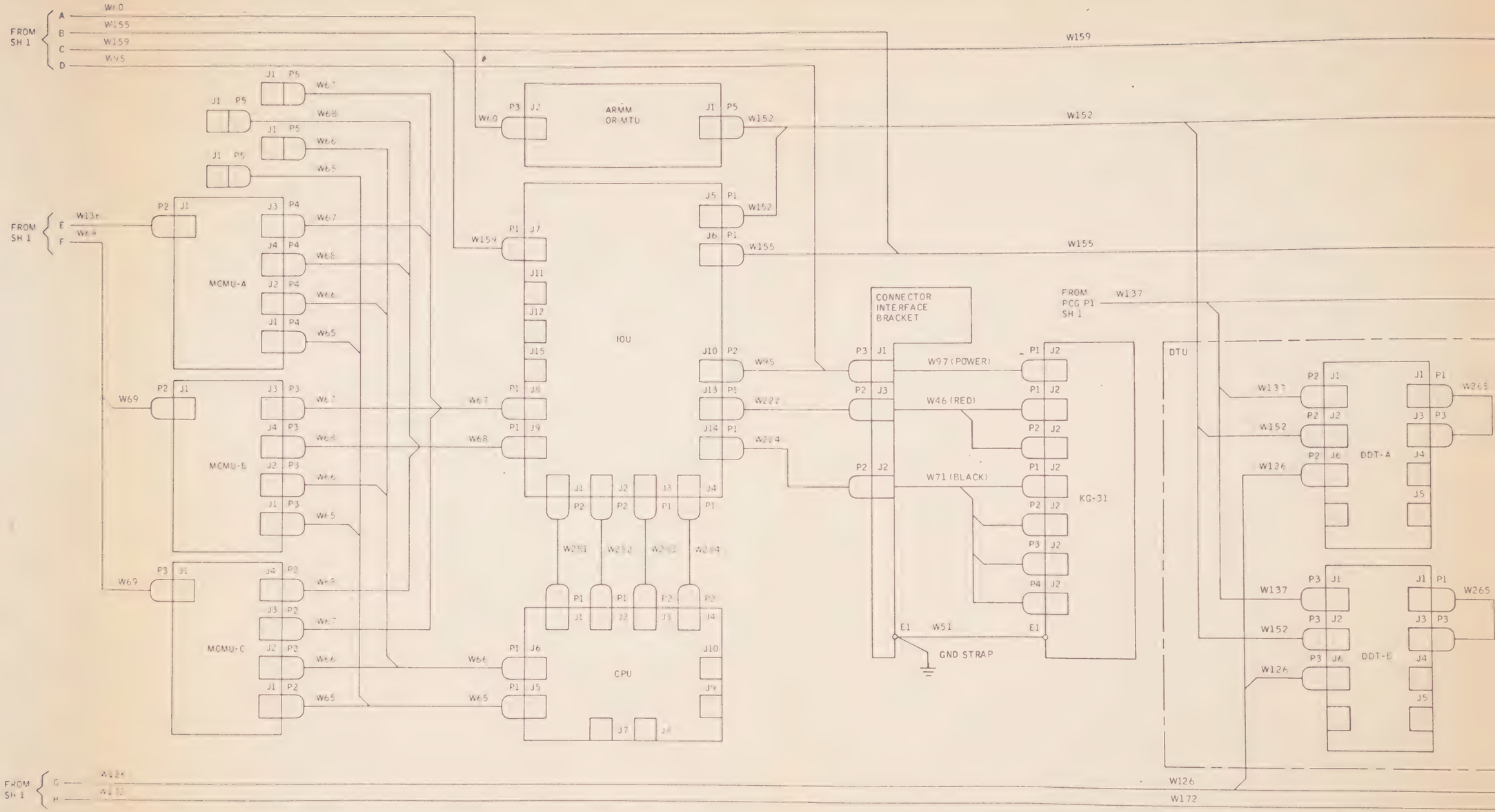

FROM SH 1
A
B
C
D
W60
W155
W159
W95
W159
W152
W155
FROM SH 1
E
F
W136
W69
MCMU-A
MCMU-B
MCMU-C
ARMM OR MTU
IOU
CPU
CONNECTOR INTERFACE BRACKET
W97 (POWER)
W46 (RED)
W71 (BLACK)
KG-31
GND STRAP
W51
FROM PCG P1 SH 1
W137
DTU
DDT-A
DDT-B
W126
W172
W265
FROM SH 1
G
H

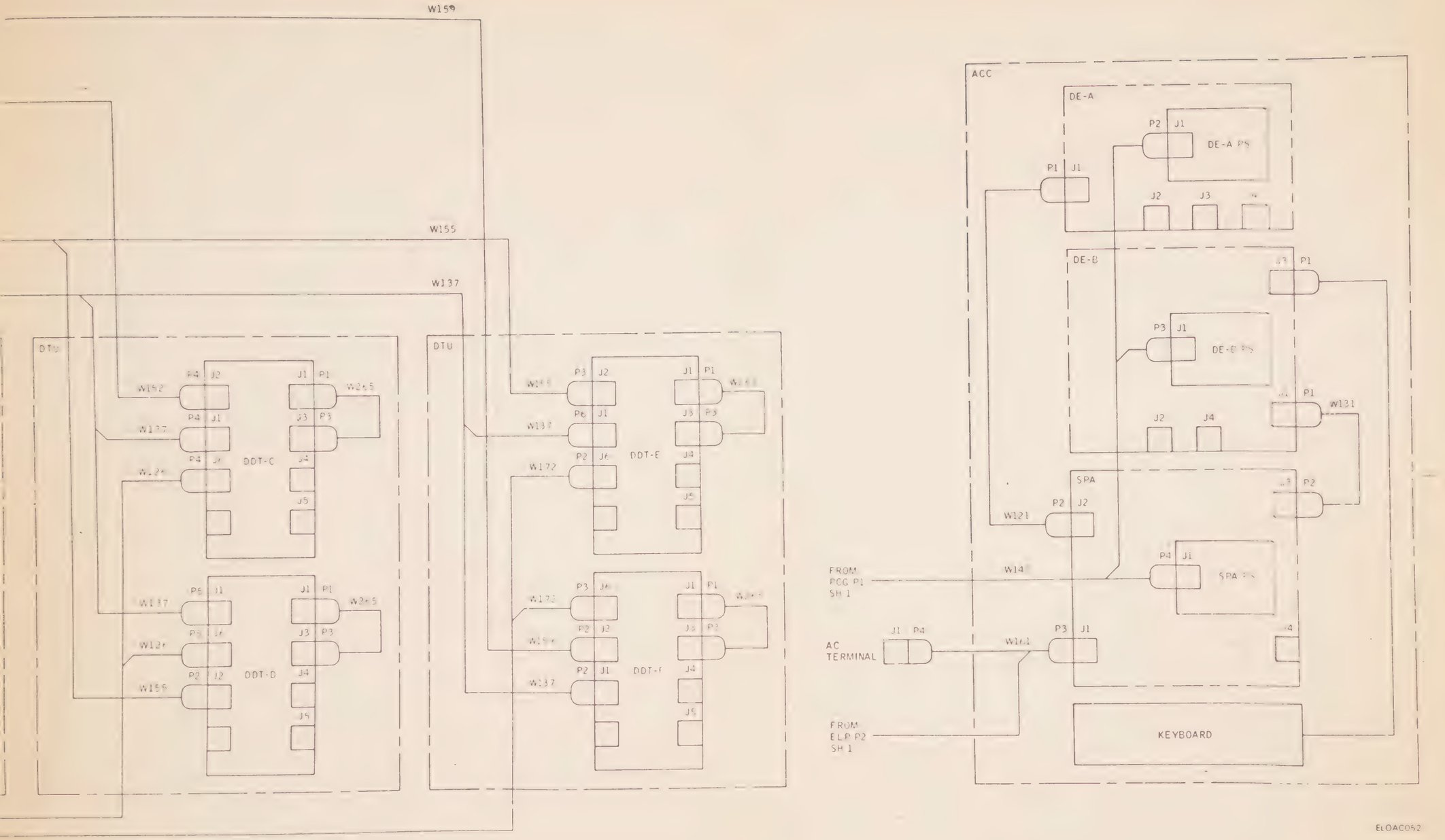

FO-4. Bn Computer and Display Group Interconnect Diagram (Sheet 2 of 2)

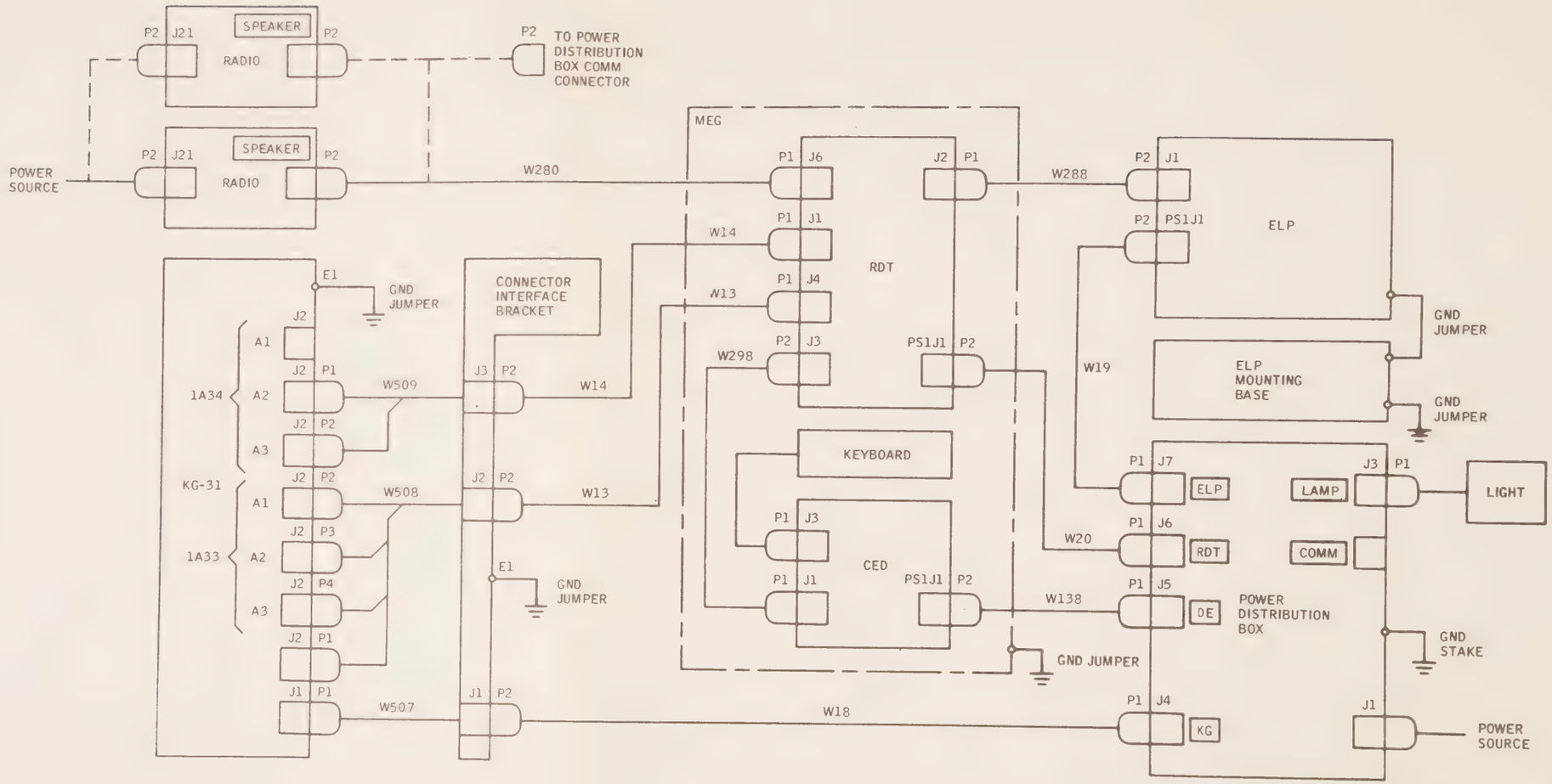

NOTES:

1. ——— DENOTES ALTERNATE CONNECTION.
2. ▭ INDICATES EQUIPMENT MARKING.

ELOAC053

FO-5. VFMED Interconnect Diagram

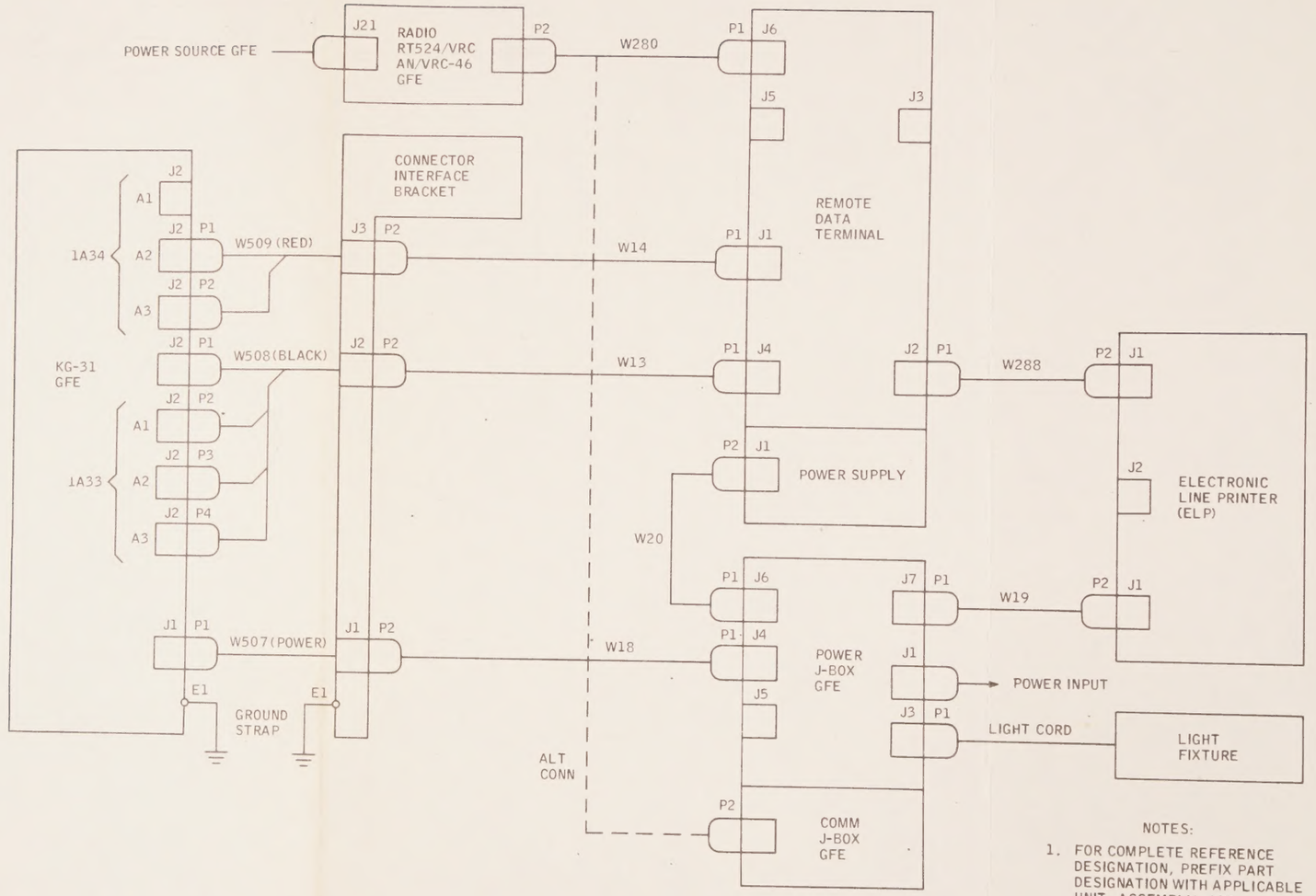

NOTES:

1. FOR COMPLETE REFERENCE DESIGNATION, PREFIX PART DESIGNATION WITH APPLICABLE UNIT, ASSEMBLY, AND SUBASSEMBLY DESIGNATION.
2. DASHED LINE INDICATES ALTERNATE CONNECTION.

ELOAC054

FO-6. BDU Interconnect Diagram